INTEGRATION OF CAD-RBS-FEM TECHNIQUES IN REFABRICATION OF A LATHE USED FOR PROFILING WHEELSET

G. Constantin 1, I. Ghionea 2, A. Ghionea 1, D. Cioboată 3, C.F. Bîșu 4

1 Prof., PhD, Machines and Manufacturing Systems Department, University "Politehnica" of Bucharest, Romania
2 Lecturer, PhD, Department of Machine Manufacturing Technology, University "Politehnica" of Bucharest, Romania
3 Senior researcher, PhD, National Institute of Research and Development in Mechatronics and Measurement Technique, Bucharest, Romania
4 Assoc. Prof., PhD, Machines and Manufacturing Systems Department, University "Politehnica" of Bucharest, Romania
george.constantin@icmas.eu
Paper received: 04.03.2017; Paper accepted: 21.03.2017.

Abstract: *The article deals with some analysis and design stages in the frame of refabrication of a machine tool of lathe type used for profiling/re-profiling of railway wheel set. The concept enables the principle of integration of computer aided design – CAD, Rigid Body Simulation – RBS and Finite Element Modelling – FEM applied to modernization of the conventional radial and longitudinal feed drives by redesigning them in terms of integrating them with CNC equipment, reusing the machine tool structure. The drives were designed as CAD models, transferred in RBS module and also in FEM one for simulation and analysis. Some analysis stages were achieved to uniquely define the performance of a machine tool, intimate knowledge of the cutting process, elucidate the specific characteristics of the driving systems and also of the specific elements of the machines, and knowledge of static and dynamic behaviour of elastic structures, tool holders and cutting tools. The results were used for drawing conclusions regarding the design and making some recommendations related to kinematic and dynamic and also cutting parameters, for running the machine tool under appropriate conditions.*

Key Words: *Modelling, simulation, method integration, lathe, wheelset re-profiling, retrofitting, CAD, FEA, RBS.*

1. INTRODUCTION

Keeping geometric dimensions of the wheelset profile, governed by national and international regulations [1], is a basic requirement for traffic safety, being essential to guiding rail rolling stock. Profiles of wheels and rail are influencing the durability of the rolling couple wheel-rail, passengers's safety and comfort by noise and vibration level [2].

Also, the noise and vibrations characteristics caused by a wheel are due to damages on profile surface and imbalance of a wheel. The damages are influenced by the rolling contact fatigue strength and the wear resistance of the profile. The wheel balance characteristic generally depends on the machining accuracy and its maintenance, being important for high-speed vehicles wheels.

Re-profiling of the wheels after a certain period of operation is imposed following a control phase which is an important part of the rolling stock maintenance. Profiling and re-profiling of wheels are performed by turning on specialized machine tools [3], [4].

For acquiring the technical characteristics of productivity and quality in terms of cost saving, a solution concerning the modernization of the machine-tool feed drives was required for a lathe used for profiling/re-profiling railway wheelsets. The movements supplied by classical drives were subject of change into numerically controlled ones [5].

UBC 150 RAFAMET lathe is a machine tool that processes the running surfaces of wheelset in a single hold, having two working units (Fig. 1) [6]. Each unit has in its structure two radial sledges (8), a longitudinal sledge (7) and a transversal sledge (6). This last sledge supports the other ones on linear guidance of the central bed (10). For processing, the radial and longitudinal slides (8 and 7, respectively) are the last elements of the feed/ positioning drives having translation motions. The slide (6) performs positioning movement when the wheel diameter of the wheelset needs to be changed.

Figure 1. Partial view of one of the working units

2. INTEGRATION OF DIFFERENT SIMULATION ENVIRONMENTS

Integrating types of models and simulations in Computer Aided Engineering is a common practice. For creating CAD models of machine tool assemblies, geometric and dimensional features of their components are necessary along with their spatial relationships of subassemblies in general assembly [7]. Obviously, all these can be done only after setting preliminary kinematic and constructive solutions of the subassemblies or drives. The transition to a new model type is done by taking over the CAD model geometry and customizing the model in the certain simulation environment [8], [9].

In modelling and simulation of Rigid Body Simulation type (RBS), the CAD model is taken over into Rigid Body (RB) Module and the joint types are identified (simple ones R and T), combined (cylindrical R+T, planar T+T+R, etc.), special (sliding, screw-nut type) or complex (Herzian contact). Some material characteristics should be associated with the CAD model for each separate component. They receive properties of density, mass, mass centre, inertia, etc. [10].

The joints recognized by the system or user-defined must in turn be defined in terms of stiffness and friction. In other words, it is necessary to quantitatively define the elasticity coefficients and coefficients of friction. Also, some degrees of motion (R or T) on types of joint movements considered are activated or deactivated to accurately define the kinematic chain motions. In this way, one defines the internal variables of the model recognized by the RBS simulation module [11].

Obviously, it is necessary to define also the external variables, such as resistant forces and moments acting on the driven elements (cutting forces or resistant torques). These in turn can be constant or variable depending on time. Cutting forces can be modelled both as constant value or variable vector.

To simulate a RB model, it is necessary to define the quantities that generate the movement [12]. They may be forces or torques in joints or a characteristic of imposed motion having a variation after a certain law. For example, let us consider the increasing of the speed of a mobile element (slide or table) from a minimum value to a maximum one following a linear, quadratic or cubic law, etc., in a specific time period. Certainly, that quantity may be position, speed or acceleration. In general, for the studies carried out the speed variation was considered. The kinematic parameters should meet the recommended values for the modernized machine tool.

The RB model particularized in such a way is ready to be simulated for viewing the internal variables, such as forces and moment in joints, the kinematic parameters (position, velocity and acceleration for all degrees of motion in joints), and also user-defined external variables.

Passing to the modelling, simulation and numerical analysis module of FEM type is based on the CAD model and simulation results in the dynamic environment (RBS). Basically, it takes the geometry from the CAD module and loads from RBS. Certainly, all components are taken over together with the materials assigned, so they are defined concerning the elastic modulus (Young) or Poisson's coefficient.

For assemblies some indications of the type of contact in bearings and guides (bound or elastic) will be required. For elastic contacts, a correct definition of the contact stiffness should be given. The contact stiffness can significantly vary depending on many parameters, among which the most important are the material couple and preload [13]. Some aspects concerning the stiffness variation type (linear or nonlinear) influence significantly the simulation results. In FE environment the loads of force or torque type are applied (concentrated, distributed, variable) indicating the point/axis of application. Depending on part or assembly role, the fixed points should be specified.

Meshing the geometric model is another important step of the FE modelling. Current versions of FE programs enable automatic meshing. For dynamic analysis further elements are specified, such as the number of natural frequencies to calculate, etc. Thus, the static analysis and then the dynamic one can be achieved to reveal in post-processing the desired results.

3. CAD MODELLING

The structure of the existing feed/positioning drives along the two directions – radial (*X*) and longitudinal (*Z*) is one electrically powered, having gear transmission mechanisms, and final transformation mechanism – screw-nut (motion screw with trapezoidal profile).

The driving will be done using AC electric motors having continuous variable speed control that can drive the mobile assembly through the ball screw-nut mechanism (coaxial drive) (Fig. 2.) [14], [15].

The driving solution is the same for both left and right working units. The asynchronous electric motors existing on the machine tool for driving the slides in rapid motion are dismantled. Their driving role for rapid motion in the modernized design is taken over by the electric motors of the feed/positioning drives (radial and longitudinal) having continuous adjustable speed (Fig. 3).

The geometry and dimensions for CAD were obtained by direct measuring on the existing machine tool. The subassemblies were dismantled in several stages and measured.

In addition, some components were redesigned in order to integrate them in the new feed drive systems keeping the connecting interfaces with the unchanged machine tool elements.

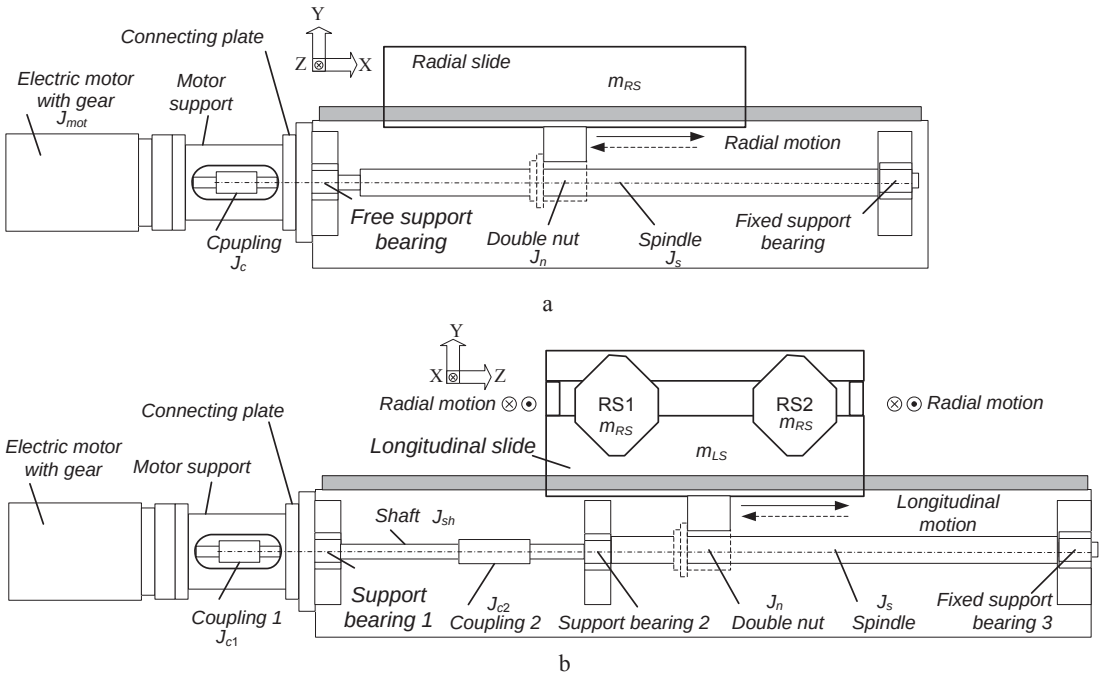

Figure 2. Kinematic structure of the feed/positioning drives:
***a* – radial feed drive; *b* – longitudinal feed drive.**

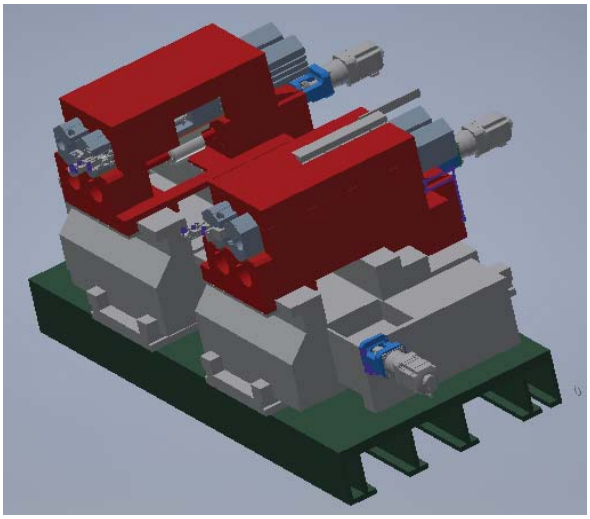

Figure 3. Virtual model of the feed drives

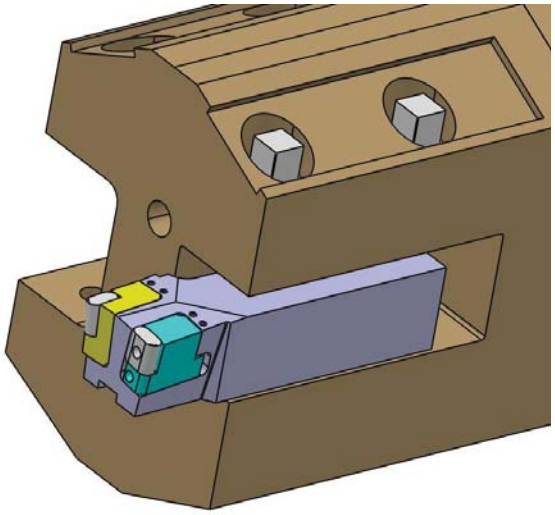

Figure 4. Radial slide-tool holder-cutting tool assembly

4. FINITE ELEMENT ANALYSIS

4.1 Static analysis

This analysis has the goal of simulating the static behaviour of the radial slide assembly together with the tool holder of type TRWL 50-55 TG (Teagu Tec), code 3605369. The insert type is LNMX 191940 TWM.

3D model (Fig. 4) of the radial slide, tool holder, supports and inserts was performed using CATIA V5.

The necessary dimensions of the slide were obtained through direct measurements on the real machine tool, others were taken from catalogues. For assembling some simplifying assumptions were considered (e.g. bolts for tightening inserts in supports were not modelled), but in the FEM stage, some constraints were used having the effect of the missing items.

Specific materials were assigned to the assembly components, as described in catalogues and standards. They are associated with parameters as density, Young's modulus and strength.

To determine stresses and deformations that occur after application of cutting loads on the assembly, fixing and tightening constraints were established between components in contact in order to have a good approximation of the real case by the virtual model.

The components of the cutting forces were calculated using specific relations based work material characteristics, cutting speed, feed, depth of cut, etc. The four cases considered are presented in Table 1.

Table 1. Cutting force obtained in operations characterized by specific parameters

Item	Operation	Depth of cut a_p, mm	Feed f, mm/rot	Cutting force F_c, N
1	Finishing	3	0.3	3132.62
2	Semi finishing	4.5	0.6	7375.91
3	Roughing 1	6	0.65	11970.62
4	Roughing 2	7	0.9	17229.4

The application of force for each studied case is done on the cutting edge considering the application point in a certain area. The guiding areas of the slide are used for applying constraints (*clamp*) of the slide in its guides.

Figure 5 shows the finite element model of the assembly in post processing, highlighting the deformations on components.

Some results of the finite element analysis performed on radial slide-tool holder-insert are summarized in Table 2.

Component deformations have small values and do not affect the machining precision and measurement. It is noted that the maximum deformation occurs on the cutting edge of the insert. For rough turning with a cutting force of 17229.4 N, the amount of deformation is of 0.0925 mm.

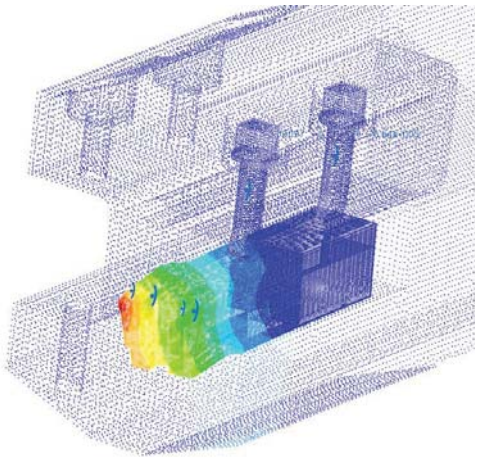

Figure 5. Deformation areas and their distribution on the assembly

Table 2. Results of static analysis

Component	Stress, N/m^2	Deformation, mm	Error, %	Operation No.
Tool holder	1.49×10^8	0.0182	18.44	1
	3.51×10^8	0.0429	18.44	2
	3.86×10^8	0.0692	17.42	3
	4.11×10^8	0.0852	18.40	4
Support 1	6.1×10^7	0.0189	17.54	1
	1.44×10^8	0.0445	16.36	2
	2.23×10^8	0.0717	15.24	3
	3.36×10^8	0.0861	16.45	4
Insert	4.52×10^8	0.0239	14.43	1
	1.06×10^9	0.0562	12.34	2
	1.66×10^9	0.0897	13.48	3
	2.48×10^9	0.0925	14.41	4
Support 2	1.13×10^7	0.0134	15.53	1
	2.65×10^7	0.0317	15.87	2
	3.59×10^7	0.0511	13.82	3
	6.2×10^7	0.0739	14.65	4

From Table 2 it is noted that in the last two processes of roughing, the value of insert and holder tensions are relatively high, close to allowable resistance of their materials.

It is advisable the use of cutting parameters that lead to cutting forces less than 17000 N. Table 2 presents the possible errors of the virtual model with regard to the real system. They are less than 20%, being considered acceptable for the assembly.

4.2 FE dynamic simulation

The CAD model of the radial slide assembly is opened in the Stress Analysis module (FEA). Some specific parameters were defined, namely the fixed constraints in the area of the nut and on the guide plates. Also the contact between slide and guide plates was manually done in *Contacts*. A verification of the materials is done for each component, especially for the guide plates that were created on place, with adaptive geometry starting from the slide surfaces.

In the simulation created, the Modal Analysis is chosen consisting of 8 number of modes (natural frequencies). After running the simulation eight values are obtained for the natural frequencies. The first one F1 = 85.43 Hz is the most significant of all having the lowest value (Fig. 6).

The working speed (corresponding to the cutting speed v_c = 50 m/min) is n = 16 rpm, equivalent to a frequency F_{work} = 16/60 = 0.266 Hz. The working frequency is much smaller than the first natural frequency F1 of the radial slide system, proving a good dynamic behaviour of the elastic system. The perturbations as variable cutting force components due to inhomogeneous material and variable surface

hardness could not reach the dangerous frequency of 80 Hz.

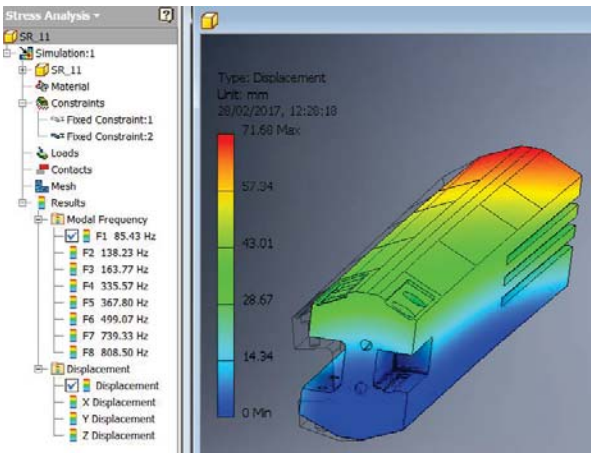

Fugure 6. First natural frequency and mode of vibration of the radial slide

5. ANALYSIS BY RBS

The feed drives were modelled as rigid body systems in Inventor Professional (Fig. 7). The model is transferred in the dynamic environment. The simulation is achieved for a variation of the slide speed defined in a specific window.

5.1 Simulation of the rapid move of the longitudinal slide

The spindle axis speed is increased from 0 to 3000 rpm = 1800 grade/s. The acceleration time is t_a = 0.3 s (Fig. 8).

The simulation of the longitudinal feed drive slide supplies the diagram of torque about the axis Z of the rotor. The model is achieved under conditions J_{rot} = 0.064515 kg·m, m_{ls} = 1238 kg, etc. One obtains the maximum torque without gear T_{max1} = 70 Nm corresponding to an acceleration time t_{acc} = 0.3 s (Fig. 9). Taking in consideration the amplification of the gear of 7:1, the torque on the rotor axis becomes T_{max2} = 70/7 = 10 Nm. The chosen gearmotor has a maximum torque of 16 Nm. Thus, the acceleration time could be decreased by 16/10 = 1.6 times. It becomes:

$$t_{amin} = t_a / 1.6 = 0.18 \text{ s}. \quad (1)$$

5.2 Simulation of the feed motion

The feed speed considered is for a feed of f = 2 mm/rev and a workpiece speed n = 16 rpm. It results the feed speed $F = f \cdot n = 2 \cdot 16 = 32$ mm/min. For the spindle pitch p = 10 mm, its speed becomes $n_{sc} = F / p = 32 / 10 = 3.2$ rot/min = 1152 deg/min = = 19.2 deg/s, the accelerating time being t_a = 0.03 s (Fig. 10).

The maximum necessary torque is T_{max} = 0.7 Nm. Taking in consideration the amplification of 7:1, the necessary torque at the motor axis is T_{mot} = 0.1 Nm, much lower than the maximum torque (Fig. 11).

In case of the radial feed/positioning drive, the slide mass is M_r = 383 kg. The cinematic simulation conditions for rapid move are the same as for the longitudinal drive n_{sc} = 0–3000 rpm, t_a = 0.3 s. For a motor without gear, one obtain after simulation the maximum torque T_{max} = 10.5 Nm.

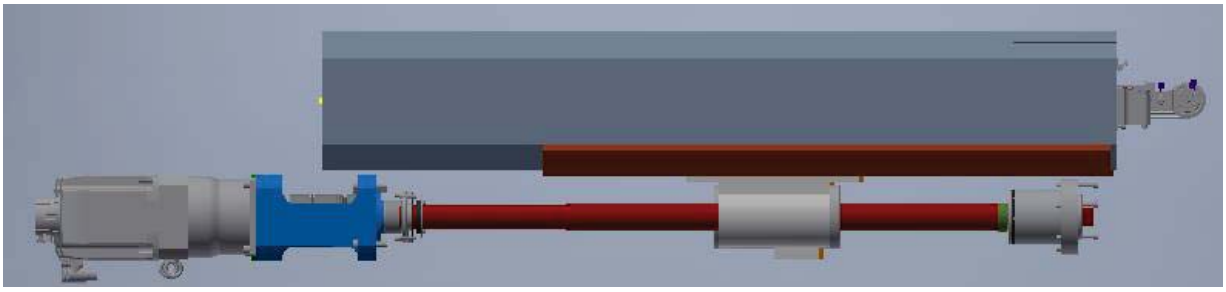

a

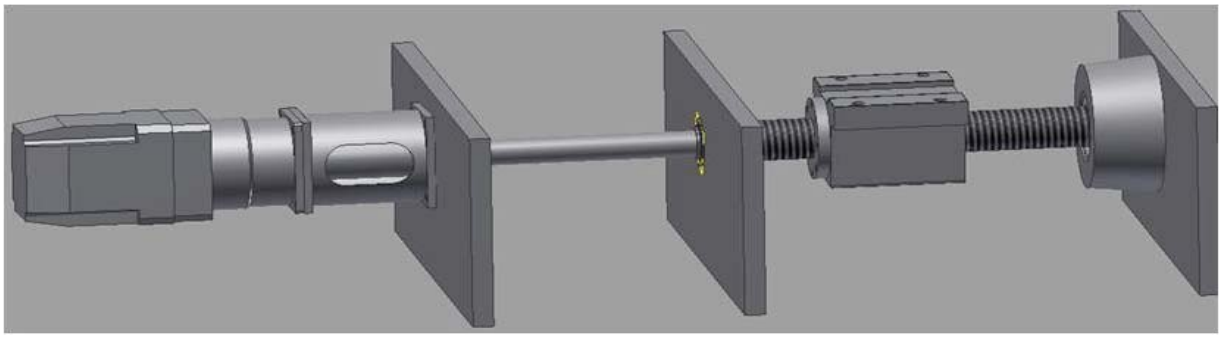

b

Figure 7. Virtual models of the feed drives: *a* – radial feed drive; *b* – longitudinal feed drive

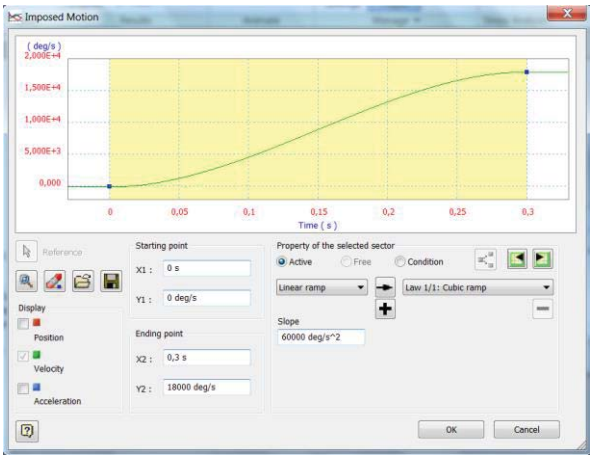

Figure 8. Variation of the spindle rotation speed (0–18000 deg/s)

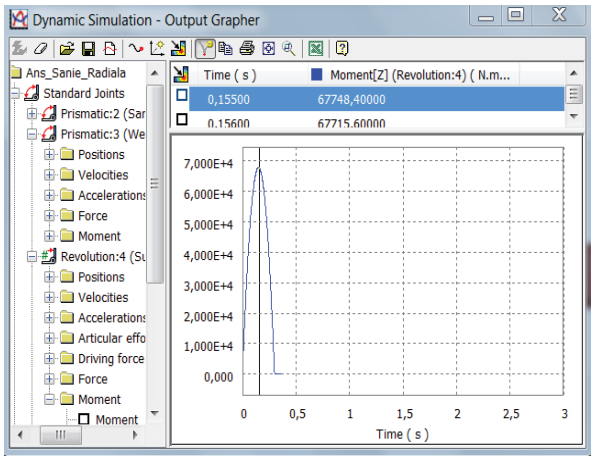

Figure 9. Variation of the drive torque in the acceleration stage (T_{max}= 70 Nm)

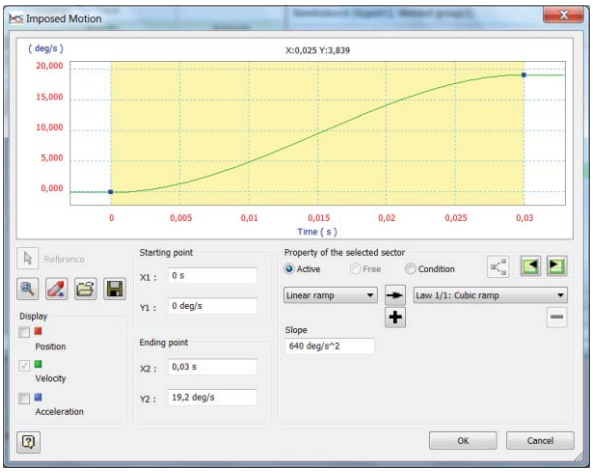

Figure 10. Variation of the spindle rotation speed (0–19.2 deg/s)

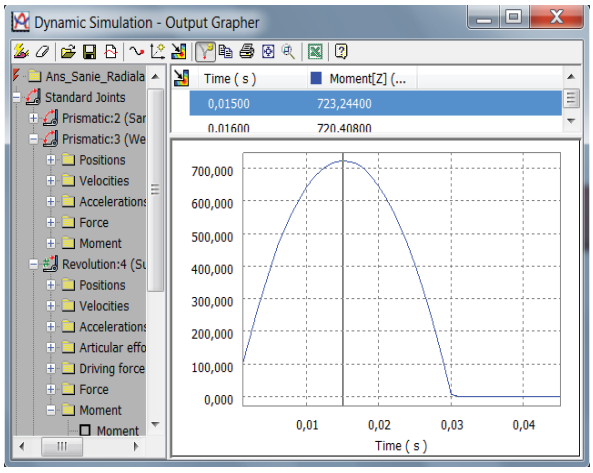

Figure 11. Variation of the drive torque in the acceleration stage (T_{max} = 0.7 Nm)

5.3 Elastic behaviour of feed drives

The stiffness of the ball screw assembly is [16]:

$$\frac{1}{R_t} = \frac{1}{R_s} + \frac{1}{R_n} + \frac{1}{R_p}, \qquad (2)$$

where R_t is the total stiffness of the assembly [N/µm]; R_s – shaft stiffness [N/µm]; R_n – nut stiffness [N/µm]; R_p – support bearings stiffness [N/µm].

The shaft stiffness in the case of fixed-radial support bearings [16]:

$$R_s = \frac{165 \cdot d_2^2}{l_1}, \qquad (3)$$

where: l_1 – distance between centres of fixed bearing to nut centre [mm], d_2 – spindle root diameter [mm].

The radial slide without measuring system and cutting tool-tool holder has the calculated mass (given by Inventor fore cast iron density ρ = 7.15 g/cm^3) M_r = 383 kg.

The approximate mass for the longitudinal slide together with two units of the radial slide is M_l = 1238 kg.

The characteristics for the radial and longitudinal feed drives along with their stiffness's (nut stiffness – R_n, spindle stiffness – R_s, fixed bearing – R_p), total calculated stiffness of the feed drive – R_t, linear dimension l_1 and root diameter d_2 are given in Table 3.

Table 3. Dynamic characteristics of the feed drives

Feed drive	d_2, mm	l_1, mm	R_s, N/µm	R_n, N/µm	R_p, N/µm	R_t, N/µm
Radial	57	470	1140	1448	353	227
Longitudinal	57	390	1385	1448	353	235

The mean cutting force F_{med} on the specific direction (radial or longitudinal) is considered for simulation in certain conditions of cutter insert, rough cutting and. The mean value is reached after a cubic variation in period of time of 0.05 s. For simulating the force variation due to inhomogeneities of the wheel material to be removed by turning, a sinusoidal component was considered:

$$F_{var} = F_{med} + \Delta F \sin(\omega \cdot t), \qquad (4)$$

where ΔF is the variation amplitude around the mean value [N]; ω – frequency [Hz]; t – time [s].

After simulation, the mean slide displacement P[2] [mm] is calculated together with the position amplitude about the mean value ±ΔP[2] µm. The

variable P[2] is an internal parameter of the RBS environment.

5.3.1 Simulation of the elastic system of the radial feed drive.

In the case of radial fee drive, the RB model is characterized by a rigidity R_t = 227000 N/mm. The rough cutting in specific cases of triangular and circular inserts is considered. The cutting parameters considered for feed force calculation were v_c = 50 m/min; f = 0.8 mm/rev; a_p = 6 mm.

In case of triangular insert TNMG / TNMM, the mean feed cutting force was F_p = 1390 N. The variable cutting feed force that was modelled on the degree of motion (T) of the slide is

$$F_{p\,\mathrm{var}} = 1390 + 200\sin(10\cdot t)\ \mathrm{N}. \qquad (5)$$

Under the action of the variable force (radial component), the slide system was simulated obtaining the displacement P[2] diagram (Fig. 12). It reveals the mean value of the displacement

$$P[2]_{p\,\mathrm{med}} = \frac{0.00702 + 0.00524}{2} = 0.00613\ \mathrm{mm}. \qquad (6)$$

The amplitude of the displacement variation about the mean value $P[2]_{p\,\mathrm{med}}$ is ±ΔP[2] = 0.89 μm.

For rough cut with circular insert RCMT / RCMX, the variable feed cutting force used in the model was

$$F_{p\,\mathrm{var}} = 2143 + 350\sin(10\cdot t). \qquad (7)$$

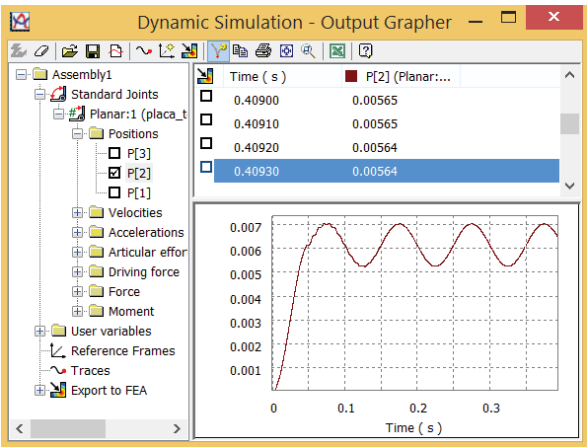

Figure 12. Radial displacement P[2] (*t*) (F_p = 1390 + 200sin(10*t*) N)

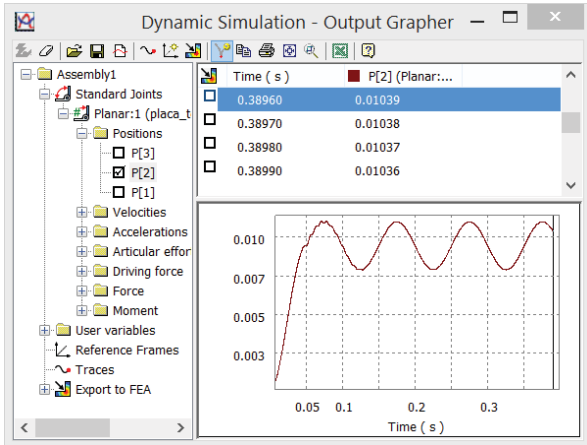

Figure 13. Radial displacement P[2](*t*) (F_p = 2143 + 350 sin(10*t*) N)

The radial slide displacement under the action of variable force is shown in Fig. 13and has the amplitude of ±1.5 μm about the mean value:

$$P[2]_{p\mathrm{med}} = \frac{0.01099 + 0.00789}{2} = 0.01888\ \mathrm{mm}. \qquad (8)$$

The feed drive total stiffness is enough for ensuring o good machining precision. The mean displacement (6 μm or 18 μm) can be compensated for by controlling the motion depending on position through the NC equipment. The maximum variations of ±0.89 μm and ±1.5 μm are below the tolerances and transfer on the processed surface as radial runout.

5.3.2 Simulation of the elastic system of the longitudinal feed drive

The simulation of the longitudinal feed drive supplies information is given in Table 4.

The characteristics of the elastic system are the rigidity R_t = 235000 N/mm and a presumed damping coefficient of 10 N s/mm.

Increasing the feed cutting force, the displacement on longitudinal direction of the slide increases from 8 μm to 12 μm. The variation ±ΔP[1] ranges from ±1.35 μm to ±1.82 μm.

For determining the stiffness of the various subassemblies of the lathe previous to machine tool modernization, preliminary tests were performed.

The vibration level of the machine in idling and cutting process was rated. The measured parameters were: amplitudes, speed vibration and accelerations.

To analyze the dynamic behaviour of the classical lathe for re-profiling railway wheelset, an experimental protocol was designed in order to characterize the machine tool both in idle operation and during the cutting process

After analyzing the dynamics of the measured parameters one can conclude that the machine has good dynamic stability with high rigidity given by the overall machine construction. The amplitudes measured have the following quantities (Fig. 14):

Table 4. Variation of the force acting on longitudinal slide and slide displacement

Insert type	$F_{f\,var}$ [N]	P[1] [mm] diagram	P[1] $_{med}$ [mm]	ΔP[1] [μm]
▲	$F_{f\,var} = 1854 + 280\sin(10\,t)$ 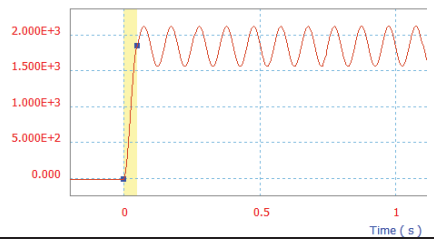	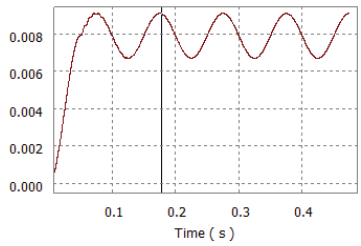	0.00834	±1.35
●	$F_{f\,var} = 2859 + 430\sin(10\,t)$ 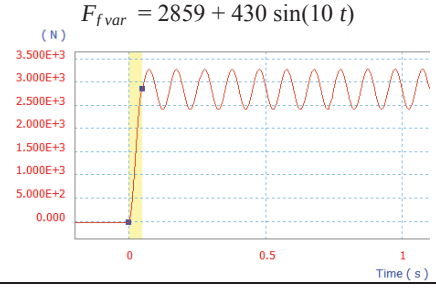	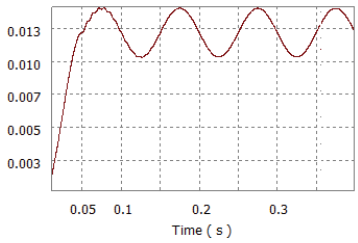	0.01215	±1.82

- in idle operation the displacements on *Z* and *Y* are in the range 3–7 μm;
- during the cutting process with constant radial depth of cut the amplitudes are situated in the range 5–20 μm.

The absolute vibration parameter measured through speed vibration and acceleration transducers were around values 0.3–0.8 mm/s for a stable cutting regime. Both movements and speed vibration show that the amplitude is heavily influenced by the variation in depth of cut. Machining on the machine tool in regime of dynamic instability leads to a high increase of the amplitudes reaching up to 55 μm.

One can conclude that the dynamic simulations (RBS) of the feed drives show an improved behavior in case of the refabricated axes.

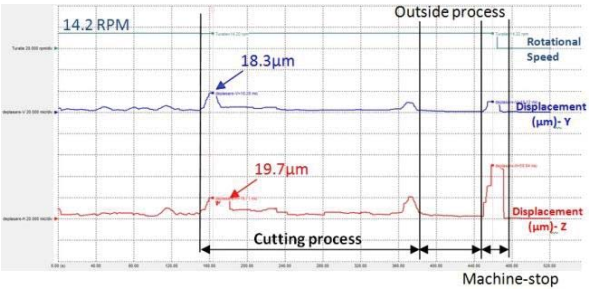

Figure 14. Vibration displacement on *Z* and *Y* axis during the cutting process

6. CONCLUSIONS

The paper presented researches in the field of retrofitting of a lathe used for profiling/re-profiling wheelset. The main objectives were:

- Checking the rigidity of the existing machine tool;
- Achieving the CAD models of the feed drives;
- RG models of the feed drives simulated for obtaining the static and maximum torques of the electric motors;
- RBS of the elastic drives assemblies for vibration verification;
- FE modelling of the drives and static and dynamic analysis.

Also, some directions for proper running of the modernized machine tool are given.

ACKNOWLEDGEMENT

The technological system is developed under Partnerships in Priority Areas Program – PNII supported by MEN-UEFISCDI, in the project PN II-PT-PCCA-2013-4-1681, *Mechatronic system for measuring the wheel profile of the rail transport vehicles, in order to optimize the reshaping on CNC machine tools and increase the traffic safety*.

REFERENCES

[1] Okagata, Y., *Design Technologies for Railway Wheels and Future Prospects*, Nippon Steel&Sumitomo Metal Technical Report, No. 105, 2013.

[2] *** UIC CODE 510-2, *Trailing stock-wheels and wheelsets. Conditions concerning the use of wheels of various diameters*, 4th edition, May 2004, International Union of Railways (UIC).

[3] Altintas, Y., Verl, A., Brecher, C., Uriarte, L., Pritschow, G., *Machine tool feed drives*, CIRP Annals-Manufacturing Technology, Vol. 60, No. 2, pp. 779-796. 2011.

[4] Ghionea, I. G., Cioboată, D., Ghionea, A., Ćuković, S., *Applicative CAD/CAM Methodology for Parameterization the Rolling Surface of Railway Wheels*, U.P.B. Scientific Bulletin, Series D, Vol. 77, Iss. 4, 2015.

[5] Bîșu, C., Constantin, G., Anania, D., & Zapciu, M., *Dynamic Behavior Study Used in Retrofitting of a Lathe for Re-profiling Railway Wheelset*, Proceedings in Manufacturing Systems, Vol. 11, Iss. 4, pp. 223-228, 2016.

[6] Ghionea, I., Ghionea, A., Cioboată, D., Ćuković, S., *Lathe machining in the era of Industry 4.0: Remanufactured lathe with integrated measurement system for CNC generation of the rolling surfaces for railway wheels*, 13th IFIP International Conference on Product Lifecycle Management PLM16, in Book Product Lifecycle Management, Editors: R. Harik, L. Rivest, A. Bernard, Chapter 27, Vol. 492, 2016,

[7] Constantin, G., *Integration of modeling and simulation tools towards virtual machine tool*, The 8th International Working Conference "Total Quality Management – Advanced and Intelligent Approaches", Belgrade, Serbia, pp. 37-44, 2015.

[8] Altintas, Y., Brecher, C., Weck, M., & Witt, S., *Virtual machine tool*, CIRP Annals-Manufacturing Technology, 54(2), pp. 115−138, 2005.

[9] Constantin, G, Chapter: *Virtual în concepţia şi exploatarea de maşini-unelte şi sisteme de maşini*, în *modelare-simulare-proiectare în domeniul maşinilor-unelte şi sistemelor de maşini* (Virtual in design and operation of machine tools and machine systems, in modeling-simulation-design in machine tools and machine systems, PRINTECH Publishing House, Bucharest, pp. 9-79, 2014.

[10] Ionescu, F., Bostan, I, Dulgheru, V., Arotăriţei, D., Constantin, G., Stratulat, F., *Mechatronics between dream and actual reality*, Proceedings in Manufacturing Systems, Editura Academiei Române, Bucharest, Vol. 5, No. 3, pp. 121-136, 2010.

[11] Stratulat, Fl., Ionescu, Fl., Constantin, G., *Dynamic evaluation of a linear axis in milling using modelling and simulation environment*, Proceedings in Manufacturing Systems, Vol. 2, pp. 99-104, 2007.

[12] Siedl, D., *Simulation des dynamischen Verhaltens von Werkzeugmaschinen waehrend Verfahrbewegungen* (Simulation of machine tool behavior during working motion), PhD thesis, TU Muenchen, 2008.

[13] Maglie P., *Parallelization of Design and Simulation: Virtual Machine Tools in Real Product Development*, PhD Thesis, ETH Zurich, 2012.

[14] A. Ghionea, I. Ghionea, D. Cioboată, M. Savu, *Preliminary considerations regarding modernization of the driving, CNC control and measurement systems of lathe model UBC 150 RAFAMET*, International Multidisciplinary Conference, 11th Edition, May 2015, Baia Mare, Romania, Nyíregyháza, Hungary, pp. 65-72, 2015.

[15] Constantin, G., & Predincea, N., *Aspectes regarding optimal design of machine tool feed drives*, Proceedings in Manufacturing Systems, Vol. 10, Issue 4, pp. 171-176, 2015

[16] *** SKF BSS, *Ground ball screws*, http://prema.com.pl/assets/Katalogi/Technikaliniowa/SKF_-_Sruby_toczne_kulkowe_szlifowane.pdf.