# CATIA v5

## Advanced Parametric and Hybrid 3D Design

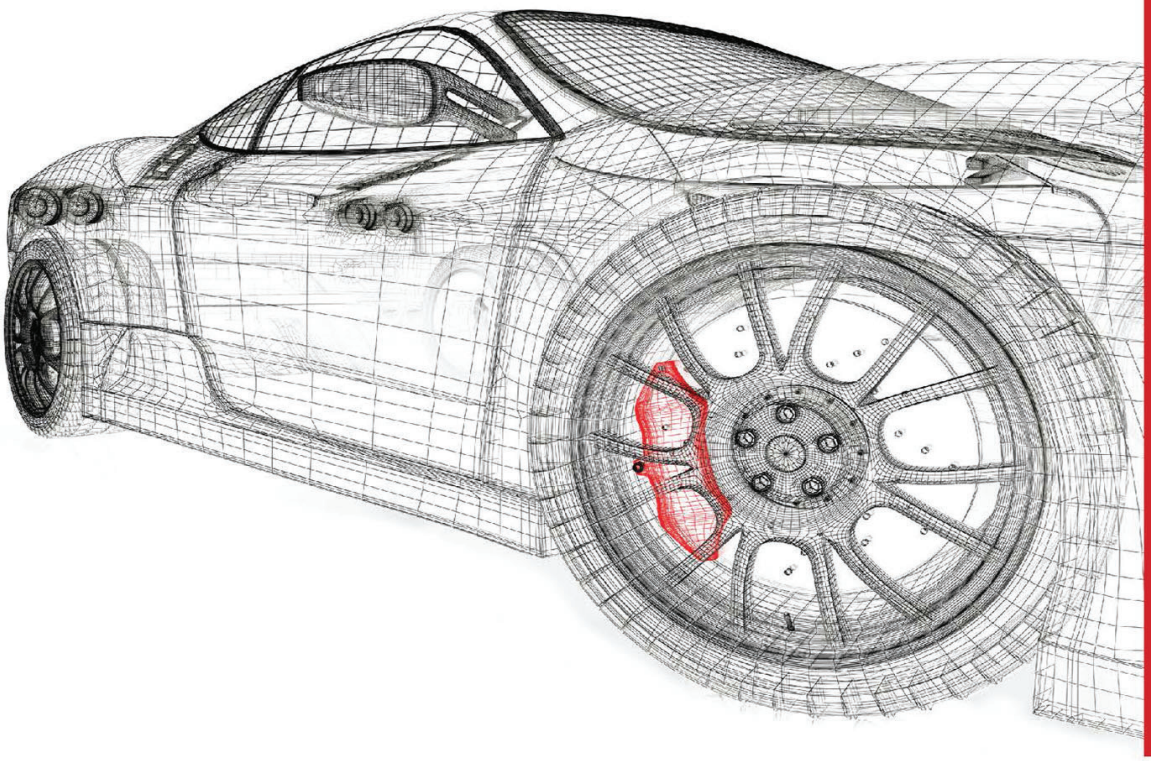

Ionuţ Gabriel Ghionea
Cristian Ioan Tarbă
Saša Ćuković

CRC Press
Taylor & Francis Group

CATIA
DASSAULT SYSTEMES
CHAMPION

# CATIA v5

This tutorial textbook is an essential companion to using *CATIA v5* to assist with computer-aided design. Using clear CAD examples, it demonstrates the various ways through which the potential of this versatile software can be used to aid engineers in 3D modelling.

Based on 20 years of teaching experience, the authors present methods of using *CATIA v5* to model solid and surface parts, to perform parametric modelling and design of families of parts, reconstruction of surfaces, to create macros and to apply various tools and their options during 3D modelling. Importantly, this book will also help readers to discover multiple modelling solutions and approaches to solve common issues within design engineering. With a comprehensive approach, this book is suitable for both beginners and those with a good grasp of *CATIA v5*. Featuring an end chapter with questions and solutions for self-assessment, this book also includes 3D modelling practice problems, presented in the form of 2D engineering drawings of many 3D parts in both orthogonal and isometric views. Using the knowledge gained through reading the book chapters, users will learn how to approach surfaces and solids as 3D models using *CATIA v5*. This book provides detailed explanations, using clear figures, annotations and links to video tutorials.

It is an ideal companion for any student or engineer using *CATIA v5* in industries including automotive, naval, aerospace and design engineering.

Readers of this book should note that the length and distance dimensions are in millimeters and the angular dimensions are in degrees. All other parameters, such as radii, areas and volumes, also use the metric system.

# CATIA v5

## Advanced Parametric and Hybrid 3D Design

Ionuţ Gabriel Ghionea, Cristian Ioan Tarbă,
and Saša Ćuković

CRC Press
Taylor & Francis Group
Boca Raton London New York

CRC Press is an imprint of the
Taylor & Francis Group, an **informa** business

First edition published 2023
by CRC Press
6000 Broken Sound Parkway NW, Suite 300, Boca Raton, FL 33487-2742

and by CRC Press
4 Park Square, Milton Park, Abingdon, Oxon, OX14 4RN

*CRC Press is an imprint of Taylor & Francis Group, LLC*



ISBN: 9781032250069 (hbk)
ISBN: 9781032250106 (pbk)
ISBN: 9781003281153 (ebk)

DOI: 10.1201/9781003281153

Typeset in Times
by codeMantra

# Contents

# Preface

This book is a part of the series of *CAD* tutorial books that presents the basic and advanced characteristics and working possibilities of modern computer-aided design software solution *CATIA v5*.

This tutorial book is intended to be not only used by students from faculties with a mechanical or industrial engineering profile but also by design engineers from various industries (automotive, aerospace, military, heavy machinery, medical technology, etc.) who need to work in this *CAD* environment. Whether they are beginners or have a good experience in using *CATIA v5*, reading all written tutorials will help them to understand, upgrade and improve their knowledge and then to apply proven 3D modelling methods, to get familiar with many new modelling operations and options, by going step by step through the solutions explained for 3D modelling problems and those proposed for practising.

Based on our 20-plus years of teaching experience, we structured and wrote this book focusing on hybrid 3D modelling of many interesting parts. Each tutorial is a challenge for the reader and gradually presents different 3D modelling techniques, carefully explained and accompanied by clear figures, with annotations for a better understanding of the context. Thus, we use numerous graphical representations, drawings, screenshots, dialog boxes, icons of the tools, etc. Text and figures support the reader in understanding the approach and highlight all important selections (geometric elements or options). By presenting all phases of the modelling in a step-by-step manner, we explain a great number of options and strategies to model complex 3D surfaces, parametric solids and family tables, macros and *Visual Basic Application* (*VBA*) scripts.

All explanations and the collection of 3D examples included at the end of this book, in all their diversity, have been carefully selected to cover additional options, and some of them are followed by video tutorials presented in the Annexes, and near most of the proposed 2D drawings. Although many theoretical aspects are briefly explained to solve the 3D modelling problems easily, this book does not present all available commands and their options. Therefore, the reader is encouraged to further explore important sub-options encountered in the dialog boxes and then to search for some new modelling solutions for solving challenging parts.

To test the reader's knowledge, the last chapter of this book contains 75 tests with their detailed answers, a scoring system (for self-assessment) and many 3D modelling problems for self-practising. Through the individual study, the reader is invited to model them in 3D because each part has an educational scope and they have different degrees of complexity, shapes and functionalities.

From students to engineers, all are advised to open and follow the pages of this book with concern and perseverance, to patiently go through all the stages of the presented tutorials, to explore the proposed 3D models and then to successfully apply the knowledge acquired in their professional activity.

The authors have made a consistent effort and passionately created all the written and video tutorials presented in this book, with great attention to detail. Several people, experts in other CAD programs, helped us create the content of this book. Our families, friends and colleagues from the university and industry supported us with patience and interest, and they proposed ideas and provided valuable observations, and we thank them for their time and feedback. The publisher (Taylor & Francis/CRC Press) also guided us with interest and professionalism to create a manuscript that will provide a great experience to our readers.

We hope that this book, by its content, will rise to the level of exigency that we set ourselves from the beginning and will be useful to all those who will have the curiosity and need to open it and learn from our knowledge.

We also challenge readers to send us other solutions for the presented 3D modelling problems and links to their own video tutorials and to contribute with their ideas and suggestions to improving the content of the future editions of this book.

# Authors

**Ionuţ Gabriel Ghionea** is an associate professor and member of the Manufacturing Engineering Department, Faculty of Industrial Engineering and Robotics, University Politehnica of Bucharest, Romania, since 2000. In 2003, he completed an internship to prepare his doctoral thesis at École Nationale Supérieure d'Arts et Métiers in Aix-en-Provence, France, and has a PhD in engineering since 2010.

Ionuţ Gabriel Ghionea has published, as the first author or co-author, 11 books in the field of computer-aided design for mechanical engineering and more than 120 articles in technical journals and conference proceedings. He is a member of the editorial board and review panel of several international and national journals and conferences.

Ionuţ Gabriel Ghionea participated in research and educational projects for the industry. He is one of the most known and appreciated CAD trainers in Romania, carrying out this activity since 2002.

He is also considered to be one of the main and first didactic promoters of the CATIA program in the Romanian academic environment, and he has made numerous CAD applications, video tutorials and practical works for students and CAD courses for companies in Romania and abroad.

In December 2020, he became a CATIA Champion, recognition issued by Dassault Systèmes (Paris, France) for his long-term commitment in promoting and using PLM System CATIA.

CATIA Champion
CATIA Certified Professional Part Design Specialist
*Contact: ionut76@hotmail.com*, http://www.fiir.pub.ro, http://www.tcm.pub.ro, http://www.catia.ro

**Cristian Ioan Tarbă, PhD,** is a lecturer at the University Politehnica of Bucharest, Romania. He became a member of the Manufacturing Engineering Department in 2009, after working for seven years as a CAD and CAM engineer, using different software packages. He has been using CATIA as the main tool for research and teaching activities for 13 years. He uses Part Design, Assembly Design, Generative Shape Design and Digital Mock-Up Kinematics workbenches in his lectures to both Romanian and foreign students.

In research activities, he also uses VBScripting and Python integrated with CATIA to complete his scientific work.

In December 2020, he became a CATIA Champion, recognition issued by Dassault Systèmes (Paris, France) for his long-term commitment in promoting and using PLM System CATIA.

CATIA Champion
*Contact: ticris@gmail.com*

**Saša Ćuković** is a postdoc and Marie Sklodowska Curie fellow at the Institute for Biomechanics (IfB/LMB, Prof. Dr William Taylor), ETH Zurich, Switzerland. He played a leading role in a spinal 3D modelling under the research project III41007 financed by the Ministry of Education, Science and Technological Development of the Republic of Serbia.

Saša Ćuković was a Swiss Government Excellence Scholarship holder at ETH Zurich, DAAD grant holder at Technical University of Munich (Germany) and OeAD grant holder at TU Graz and MedUni Vienna (Austria) working on non-invasive diagnosis of spinal deformities. His main research interests include CAD/CAM systems, reverse engineering and non-invasive 3D reconstruction and modelling in engineering and medicine, computational biomechanics, augmented reality and computer vision. He has valuable teaching experience and has published few books in the domain of CAD/CAM within the University of Kragujevac. He also disseminated his knowledge in various projects and in teaching abroad.

He has authored/co-authored five books and more than 80 papers. Since 2019, he is a senior scientific associate in the Institute for Information Technologies (IIT) Kragujevac, and from 2022 he is a member of the Institute for Artificial Intelligence Research and Development of Serbia, Novi Sad, Serbia. He is a group leader at ETH/IfB/LMB for computational 3D biomechanics of the spine and a senior member of IEEE.

In December 2020, he became a CATIA Champion, recognition issued by Dassault Systèmes (Paris, France) for his long-term commitment in promoting and using PLM System CATIA.

CATIA Champion
*Contact: cukovic@kg.ac.rs*, https://scukovic.com

# 1 Introduction

## 1.1 COMPUTER-AIDED DESIGN IN CONCEPTION AND DEVELOPMENT OF INDUSTRIAL PRODUCTS

*Computer-aided design* (*CAD*) is increasingly used in a wide variety of engineering fields, and it is evolving rapidly. This concerns both the general architecture and the addition of new functions and modelling tools in existing *CAD* programs, as well as their capability to create a geometry of high complexity, parametrically designed, based on the specifications imposed by the client, also allowing *FEA* simulations or machining on *NC* machine tools.

The ever-increasing complexity of products leads to some difficulties in the design and then in the manufacturing stages. The design engineer must be aware of advanced working methods, and in his work, he tries several possible variants and solutions and then optimizes the one identified as correct following the successful modelling procedure by implementing *CAD* and simulation tools. He also takes decisions related to shape, material properties and manufacturing technologies, based on the information taken from *CAD* handbooks, standards, databases, numerical analysis, the experience of the company and his intuition and knowledge. Finally, his activity leads to the validation of the projects and their transformation into successful products.

Thus, in general terms, the modern computer-aided design can be defined as the process of integrating a set of functional specifications and requirements into a complete virtual representation of the physical product or system that best meets those requirements and specifications.

The evolution of *CAD* systems has shortened the product lifecycle, increased their complexity and performance, and stimulated competition for new reliable products at attractive prices. The competition also means new jobs and opportunities for design engineers.

Companies are looking for specialists who are able to work with modern *CAD* systems, to make complex numerical programs and scripts and to use libraries with algebraic calculation methods and statistics, and who have a true vision in creating complex surfaces, which meet requirements in almost all current products. Other specialists perform specific calculations and kinematic simulations, determine moments of inertia, simulate mechanical processing on machine tools equipped with numerical control, etc.

Not only the design and development activities, but also the cost related to the design changes are intensifying as the project advances towards the launch in series production and then on the market, being much lower in the design phases when the decisions are made to establish the optimal solution.

## 1.2 GENERAL ASPECTS REGARDING THE USE OF CATIA v5 PROGRAM WORKBENCHES

*CATIA* (*computer-aided three-dimensional interactive application*), a product of *Dassault Systèmes*, is currently one of the most widely used integrated *CAD/CAM/CAE* systems worldwide, with applications in various fields, including machine manufacturing industry, aeronautics, naval industry, automotive industry, robotics, agricultural machinery and equipment, chemical industry, food industry and consumer goods. The 5th version has been available since 1999, with each new release introducing new workbenches and additional functionalities, in parallel with the improvement of the existing ones.

*CATIA v5* provides a wide variety of solutions to meet all design and manufacturing issues. Among its many functionalities, advanced design of mechanical parts, interactive creation of

DOI: 10.1201/9781003281153-1

assemblies, faster 2D and assembly drawings, the ability to design in a parameterized manner, generation of complex surfaces, performing finite element analyses and simulation mechanical processing can be mentioned.

All these functionalities are possible due to the fact that the program uses virtual models, defined as the set of computer data necessary to manipulate an object created on a computer, in the same way as a real object. It is possible, thus, to test it under various mechanical and thermal stresses and their dynamic behaviour, to check whether or not an assembly is correct with all its constraints, to ensure that the moving of components, one against the other, does not generate collisions, etc.

*CATIA v5* has a modular structure, which ensures great versatility and transition from one workbench to another, with the possibility of continuous editing of the project in progress. Although the number of workbenches implemented in the program is very large, some of them can be considered as principal, as the following ones:

- *CATIA Sketcher* – creates the sketch of a two-dimensional profile, being a starting point in the process of obtaining a three-dimensional feature.
- *CATIA Part Design* – is used for the three-dimensional design of parts. This workbench, along with *Sketcher*, may be considered as core workbenches of the *CATIA v5* program.
- *CATIA Assembly Design* – allows the generation of an assembly of parts using various mechanical constraints for their positioning and establishing contact between surfaces. As a scalable workbench, *Assembly Design* can be cooperatively used with other current companion products such as *Part Design* and *Generative Drafting*.
- *CATIA Drafting* – contains the necessary tools to obtain 2D drawings of the created parts and assemblies.
- *CATIA Knowledge Advisor* – is very useful in all the design stages and parameterized management of parts and assemblies, and also in the automation of certain processes of analysis with finite elements, simulation of processing on NC equipment, etc.
- *CATIA DMU Kinematics* – creates complex movement simulations based on kinematic couplings established between components of assemblies.
- *CATIA Generative Sheetmetal Design* – is used to model sheet metal parts, processed by cold plastic deformation. The user has the opportunity to obtain 2D drawings and their unfolding views.
- *CATIA Generative Structural Analysis* – is a powerful environment to perform analyses with finite elements, applied to parts and assemblies, in order to determine their behaviour under defined conditions of static or dynamic loading.
- *CATIA Generative Shape Design* – has applicability in creating objects that have complex surfaces and are difficult to design in other workbenches.
- *CATIA Prismatic Machining* – serves to simulate mechanical processing on machine tools equipped with NC devices.

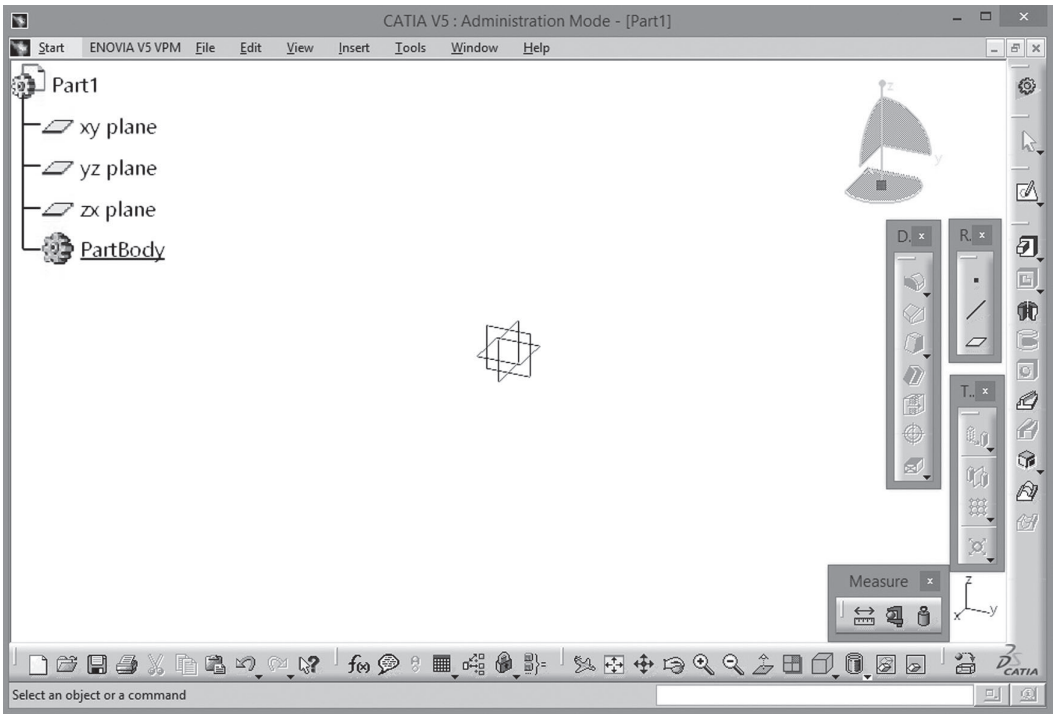


**FIGURE 2.1** The program interface in the *Part Design* workbench.

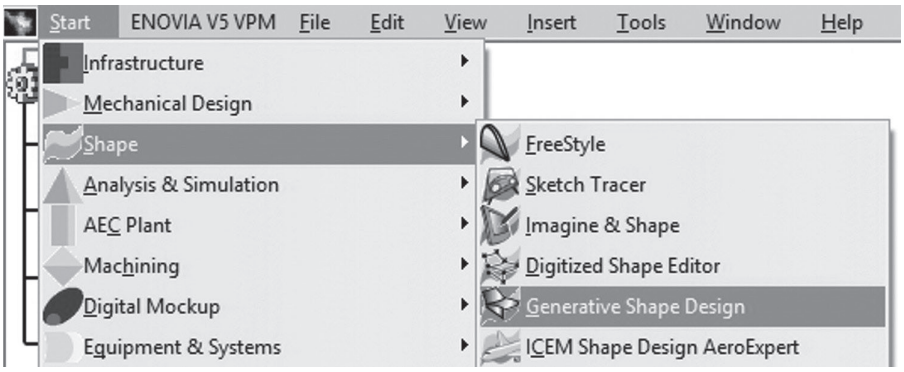


**FIGURE 2.2** Accessing the *Generative Shape Design* workbench.

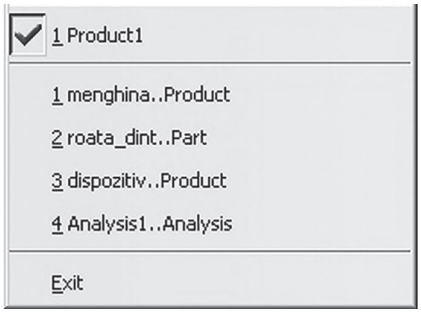


**FIGURE 2.3** Different types of files opened by the user.

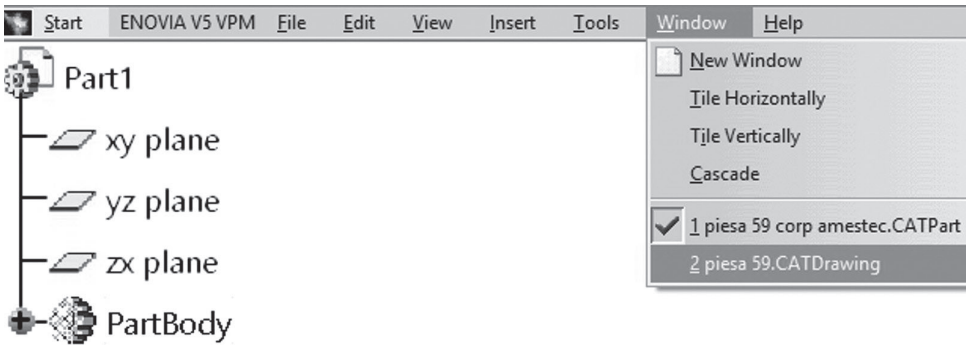


**FIGURE 2.4** Opening the *Window* menu to choose what file will become current.

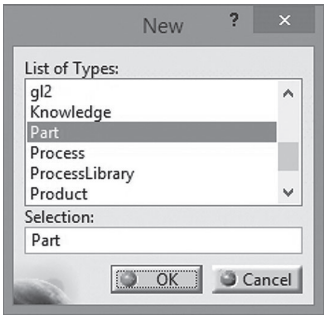


**FIGURE 2.5** List of various types of files.

In the example in Figure 2.4, the *Window* menu is also presented, which helps the user to select which of the two open documents will become current, receiving, by selection, a check mark next to the name. At the moment, even if the user has opened multiple documents (with the same or different extensions), he can work only on one document, for example, to model, edit, or view a 3D model of a part. It is always possible to access another document/file, for example a 2D drawing of the current 3D model to insert the required dimensions.

The same figure shows the names of two different documents, the model of a part (with *CATPart* extension) and its 2D drawing/drafting (*CATDrawing*) because the user needs both files to open. The transition between documents is simple and fast, and the connection between them is also established by the program. This principle is called external association between different workbenches.

The menu bar (*File*, *Edit*, *View*, *Insert*, *Tools*, *Window* and *Help*) is basically a standard for *Microsoft Windows* compatible programs and contains *CATIA*-specific options. These differ depending on the workbench used, and some that are more important will be presented below, and others are used and explained in detail in the tutorials in Chapter 3.

For instance, the *File* menu contains options for saving and opening files. Selecting the *New* option leads to a selection box with the same name in which the program's file types are presented in a list. Choosing a type leads to the opening of a workbench; for example, in the case of Figure 2.5, following the *Part* selection, the *CATIA Part Design* workbench will open. Note also the *Save Management* option, which is used to save some files to different locations. The dialog box in Figure 2.6 also shows a preview of the saved entity, in this case, a part and its 2D drawing. It shows the names of the files, where they will be saved, their status, the user's rights over the respective location, etc.

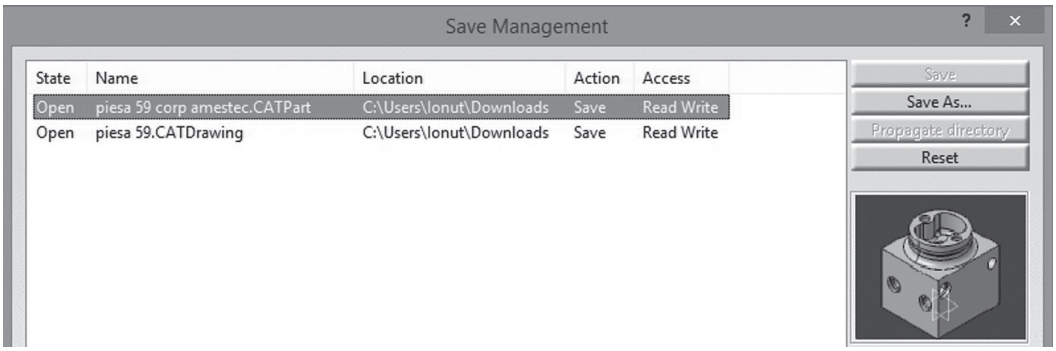


**FIGURE 2.6** The management window for saving files.

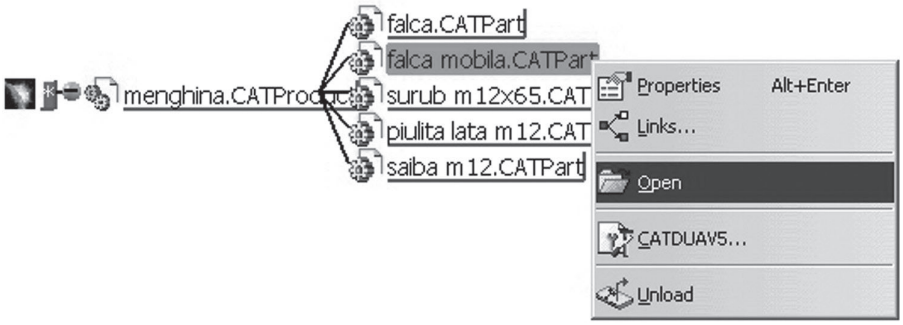


**FIGURE 2.7** Tree-like structure of an assembly.

The *Close*, *Open*, *Save*, *Print*, *Document Properties* and *Exit* options are well known because they are part of any menu of a modern program in various operating systems. The *Desk* option, however, is specific to some *CAD* programs and shows, according to Figure 2.7, the links established between an assembly (*CATProduct*) and its components (*CATPart*). Also, right-clicking on a component and choosing the *Open* command has the effect of opening the document containing that component. The representation in the figure is particularly suggestive.

The *Edit* menu contains the well-known *Undo*, *Repeat*, *Cut*, *Copy*, *Paste*, etc. options. This menu also includes *Delete* (for deleting, for example, a component from an assembly) and *Update* (for updating geometrical and dimensional constraints, components' positions in the assembly, or 2D drawings after changing some dimensions of the 3D model of a part or belonging sketches, etc.).

The *Component Constraints* option involves selecting a component of an assembly and highlighting all assembly constraints in which that component is involved.

For example, Figure 2.8 shows the components of an assembly model and the list of their applied constraints. Three of them are selected, and the name of the component is observed in the name of each constraint.

Choosing the *Links* option displays the dialog box in Figure 2.9. A window with a list of components of the assembly is displayed, and the user has the possibility to select one of its parts to replace (pressing the *Replace* button) with another part.

In the selection box on the right, *Browse*, two buttons are available, as follows: *File* allows user to load a file, by default a component, from a storage medium, to replace the current selection, and *Loaded document* specifies a component already loaded and accessible from the *Window* menu. Of course, the replacement of a component must be possible and logical, and the assembly constraints are taken from the previous component to the one that replaces it.

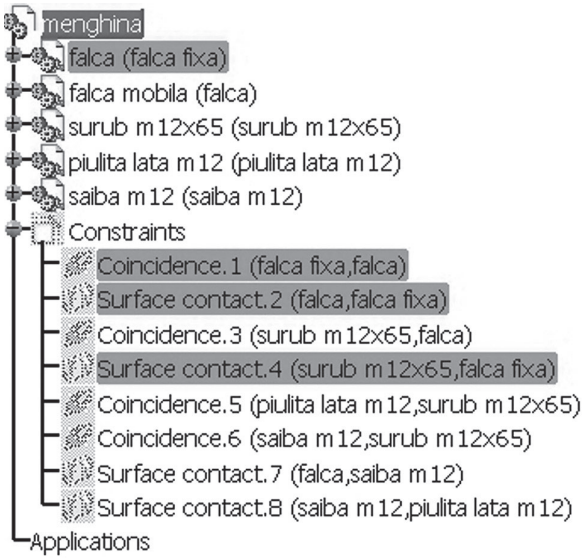


**FIGURE 2.8** Structure of an assembly model with constraints applied between components.

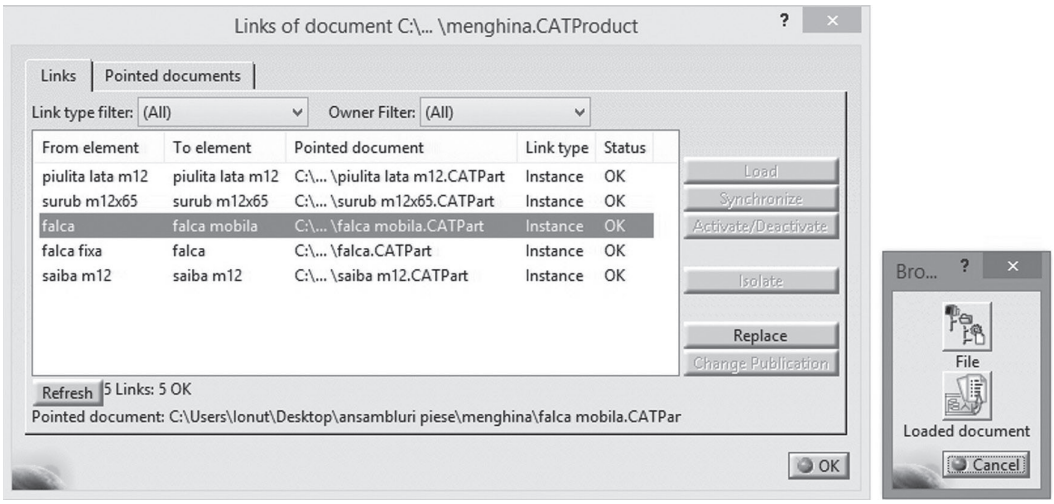


**FIGURE 2.9** Replacement of components from an assembly by loading other available parts.

This method is applicable to assemblies containing parts for which several variants have been created. These variants are, usually, composed of different shapes of the same part(s), newer revisions of the same part(s) or a totally new constructive solution. Thus, different constructive solutions can be tested for the respective variants of assemblies.

It can be, also, observed, the link between the components' names in the specification trees and their files, previously saved with a certain name, and also the type or status of the links (fields *Link type* and *Status*).

The *Properties* option is used to display and edit useful information regarding a *CATIA* object; it may be an individual 3D model, a component of an assembly, a 2D drawing or a finite element analysis.

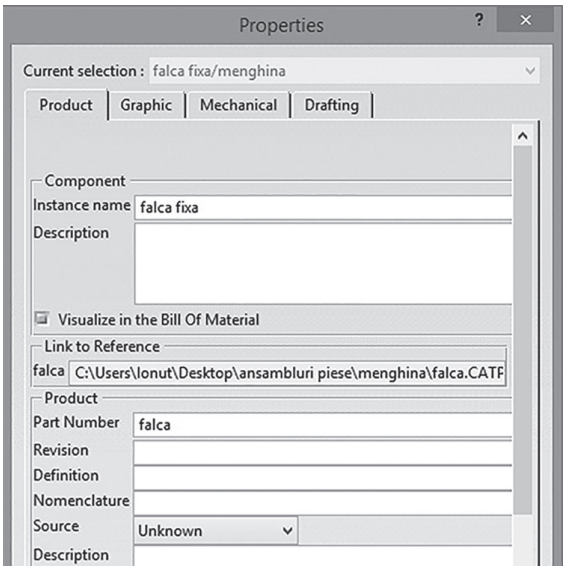


**FIGURE 2.10** Establishing the names for a component and for its instance.

Thus, Figure 2.10 shows the *Properties* dialog box for a 3D model that is part of an assembly. The user can see the *Instance name* field in the *Component* area, and also the *Part Number* in the *Product* area. The fields *Description*, *Revision*, *Definition*, etc., are editable by the user, their purpose being a complete definition of the component. In the non-editable field *Link to Reference*, the path to that component (*CATPart*) on the storage medium is placed.

The *Views* menu contains the options for viewing the current document (Figure 2.11). Thus, *Fit All In* is used to display the entire document in the working environment on the screen, and *Zoom*, *Pan* and *Rotate* to change the perspective, similar to any other *CAD* program.

These options are very useful for viewing a 3D model from different positions/angles and at a different zoom level (approaching/moving away from the workpiece or assembly), in order to choose certain points, edges, planes and surfaces that are not seen in the foreground and are behind or below other opaque surfaces. Although these options are in the menu and in the *View* toolbar, some can also be activated with the keyboard and mouse (Figure 2.12), through different key combinations and/or buttons.

Thus, if the user presses and holds down the mouse wheel, the *Pan* operation is performed (the view plane moves left-right and up-down). If the *Ctrl* key on the keyboard is held down and the


**FIGURE 2.11** Options to view and navigate the workspace.

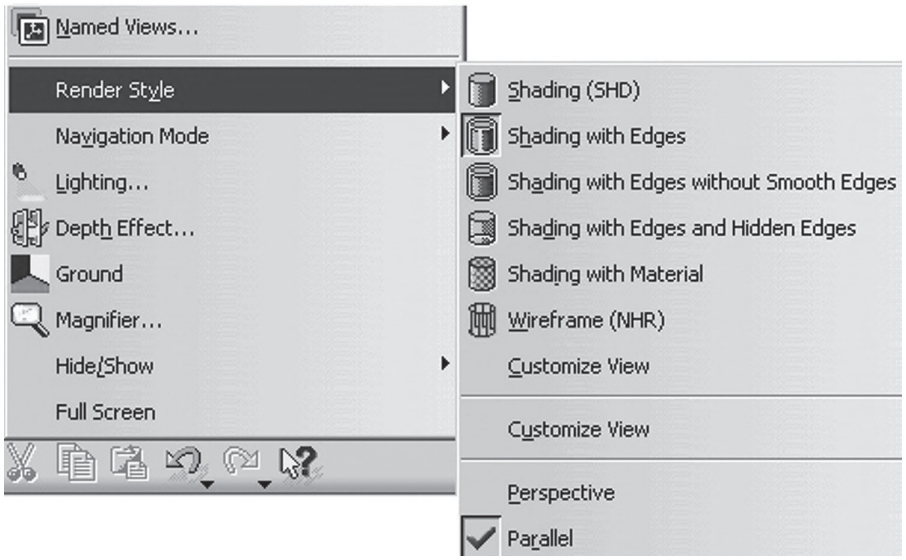


**FIGURE 2.14** List with the *Render Style* view modes.

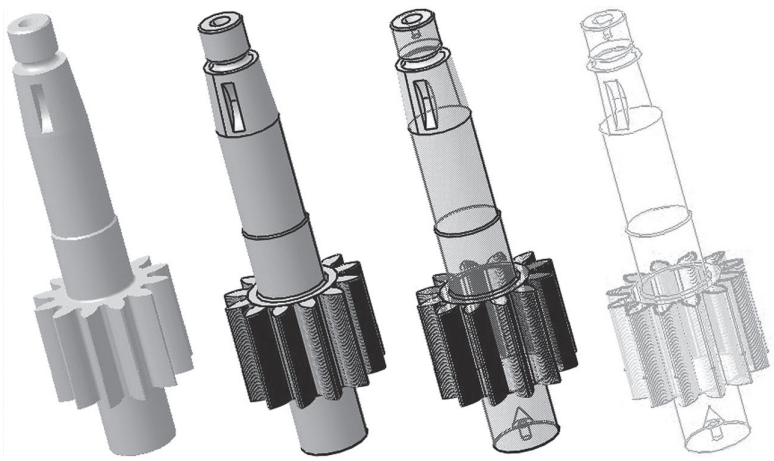

**FIGURE 2.15** Pinion part displayed in four view modes.

The *Render Style* option (Figure 2.14) is used to display and visualize the models in workspace in one of the few view modes available in the program: *Shading*, *Shading with Edges*, *Shading with Edges without Smooth Edges*, *Shading with Edges and Hidden Edges*, *Shading with Material*, *Wireframe and Custom* (some of them are displayed in Figure 2.15).

The viewports can be displayed in *Perspective* or *Parallel* modes (Figure 2.16). The differences in the matter of visualization between the two representations are noticeable. The *CATIA* program starts by default in *Parallel* mode, so the user has a correct representation of the part or assembly to observe the parallelism or perpendicularity of the edges, planes and faces.

Generally, *CAD* uses *Parallel* representation, but the user can also choose *Perspective*, a visualization closer to reality, useful in the case of interactive presentations of assemblies.

The *View* menu contains the *Lighting* option, which can be used to add light to the workspace. According to the dialog box in Figure 2.17, three types of lights can be used (*Single Light*, *Two*

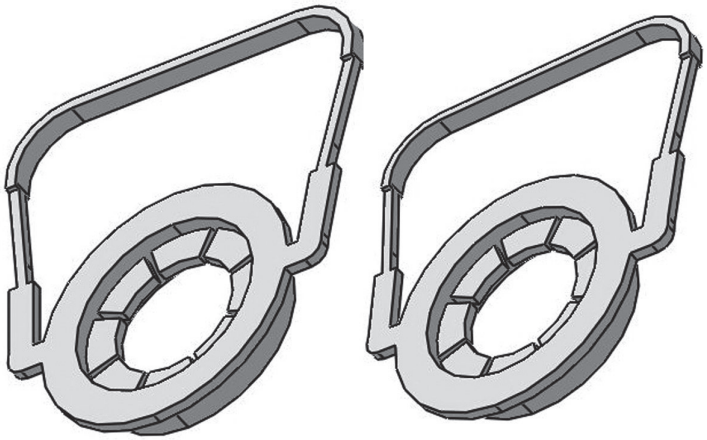

**FIGURE 2.16** Part displayed in *Perspective* and *Parallel* modes.

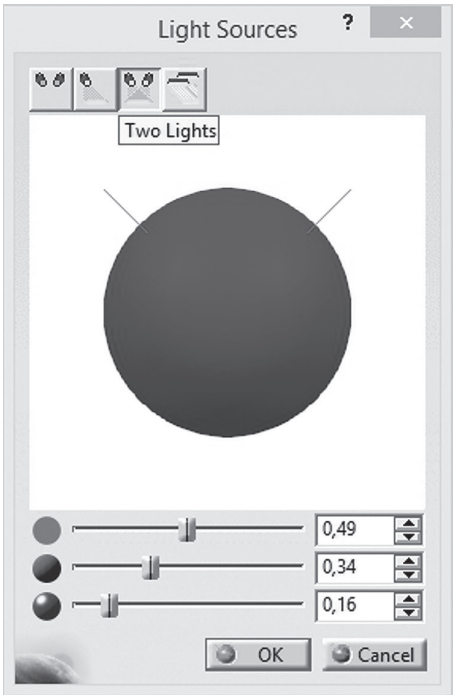


**FIGURE 2.17** Different options to add lights in the workspace.

*Lights* and *Neon Light*). The appearance of the light (*Ambient*, *Diffuse* and *Specular*) is determined by the three sliders with their values. The *Lighting* option is recommended to be used when it is not possible to adjust the brightness of the monitor, or when it is not sufficient.

The *Hide/Show* option allows the user to select any entity (or group of entities) of the model and place them in a separate space, where they are not visible, also called 'no show space'. Those entities are 'hidden' temporarily or permanently, depending on the future requirements of the document in work.

Thus, it may be necessary at some point to hide certain curves, planes, sketches, etc., and then it may be useful to display them again.

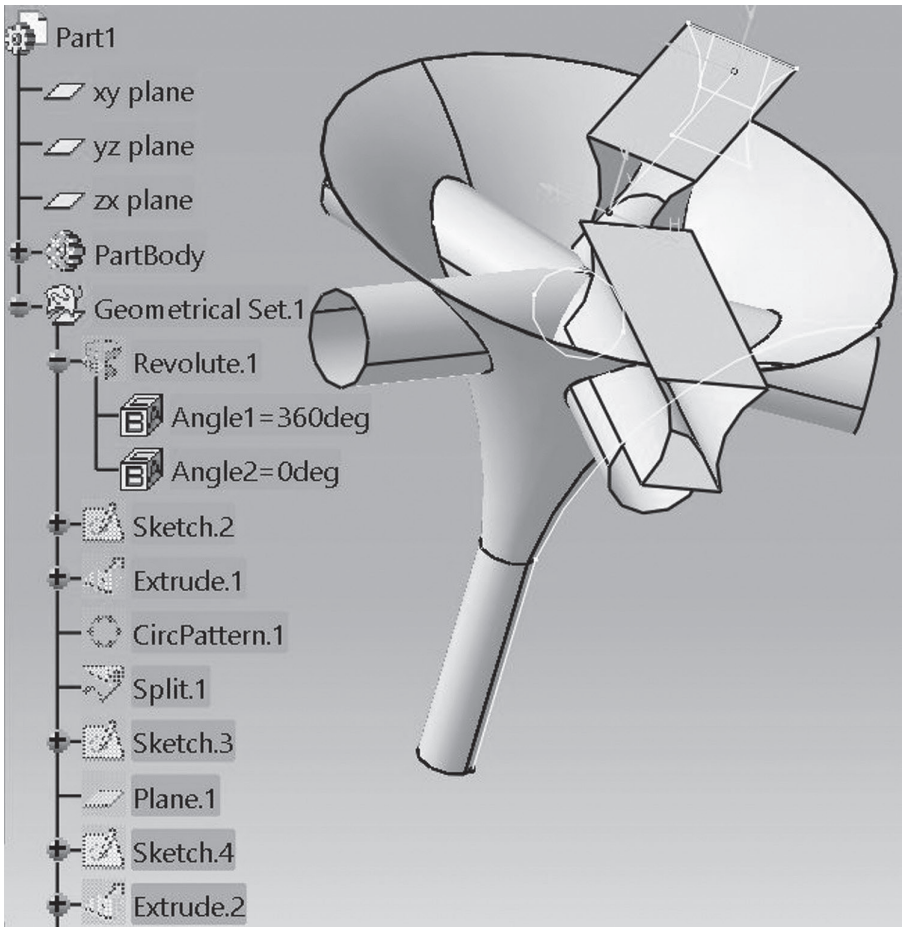


**FIGURE 2.18** Different types of features placed in the hidden space.

The *Swap visible space* option is, in fact, a complement to the previous option, with the role of providing the user with access to the space where the hidden entities are placed. As seen in Figure 2.18, the hidden space contains numerous curves, planes, sketches and surfaces. The user has the possibility to select the features that he wants to be displayed again (the selection can also be a multiple one, holding down the *Ctrl* key during the selection), using the *Hide/Show* option. The hidden space is not intended for work, with all profiles being drawn by default in the visible space.

The *Insert* menu generally contains options and tools that are also present in the toolbars. It is recommended to use this menu at least in the first phases of working in *CATIA*, in the process of learning the program, because the icons and the names of the respective instruments are presented. Depending on the workbench used, the content of the menu differs.

For example, Figure 2.19 shows an excerpt from the *Insert* menu when modelling an assembly. The user can see the list of assembly constraints (icons and names), compared to the *Constraints* toolbar, specific to the *CATIA Assembly Design* workbench (shown next to it, on the left). Selecting an icon from the toolbar or choosing the same icon with its name from the menu is similar and activates a specific constraint.

The *Tools* menu contains important options related to creating mathematical relations and specific parameters for the part or assembly in work (*Formula*), to capturing an image or video sequence (*Image*), recording certain user actions to automate them (*Macro*), launching additional utilities

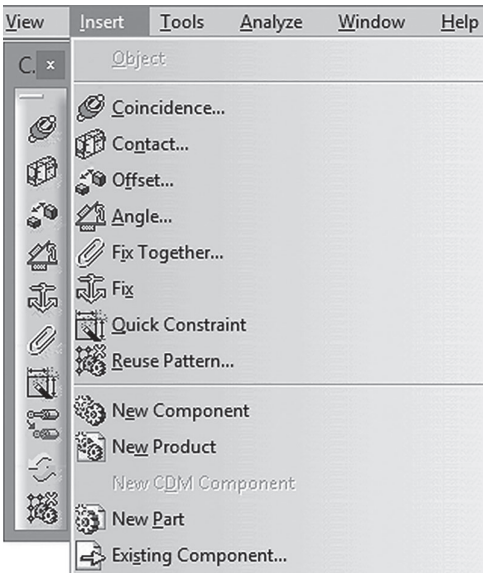


**FIGURE 2.19** Content of the *Insert* menu in the *Assembly Design* workbench.

included in the program (*Utility*), displaying/hiding elements of sketches, planes or 3D models (*Show* and *Hide*), customizing and setting all the working environment parameters (*Customize* and *Options*), accessing catalogues with standardized components included in the program (*Catalog Browser*), etc.

Choosing the *Formula* option opens a dialog box (Figure 2.20), and the user has access to the parameters of the current document and, also, the possibility to establish relations between them. The complex methodology to work with parameters and their related relations is described in detail later in this book (Chapters 3 and 4).

The *Image* option, together with its options (*Capture*, *Album* and *Video*), is used to take screenshots of static type (image) or dynamic (video), but also to manage the files thus obtained. Its options are useful for presentations and for reproducing the actions performed by the user during a work session.

Unlike *Image*, the *Macro* option records the user's actions to keep them in a file. These actions can be run at any moment, with the purpose of automating certain work steps. Recording (Figure 2.21) takes place after selecting the *Start Recording* option. The user chooses the file in which to save the recorded script, the language used and the name. The *Current macro library or document* field contains the file to which the automation applies. The language in which the automation is stored can be *Microsoft VBScript* or *CATScript*, as selected in the *Language used* field.

The *Macro* option is used to run the automation. The path and the name of the file containing the scripts (the *Available macros* field) are entered in the dialog box as shown in Figure 2.22.

Saved macros (codes for automatic actions) can be run, edited, renamed, deleted, selected, etc., using the buttons on the right. Chapter 5 of this book contains detailed information and samples related to automation and scripting.

The *Customize* option is used to personalize the *CATIA* working environment. Thus, according to the dialog box with the same name in Figure 2.23, in the *Start Menu* tab, items can be added for quick access. From the *User Workbenches* tab, it is possible to create customized workspaces.

The *Toolbars* tab presents all the toolbars of the program, and the user has the facility to create his own custom toolbars, with tools from different categories.

In addition, an important and useful option is to restore the position and contents of the standard toolbars (*Restore position* and *Restore all contents* buttons).

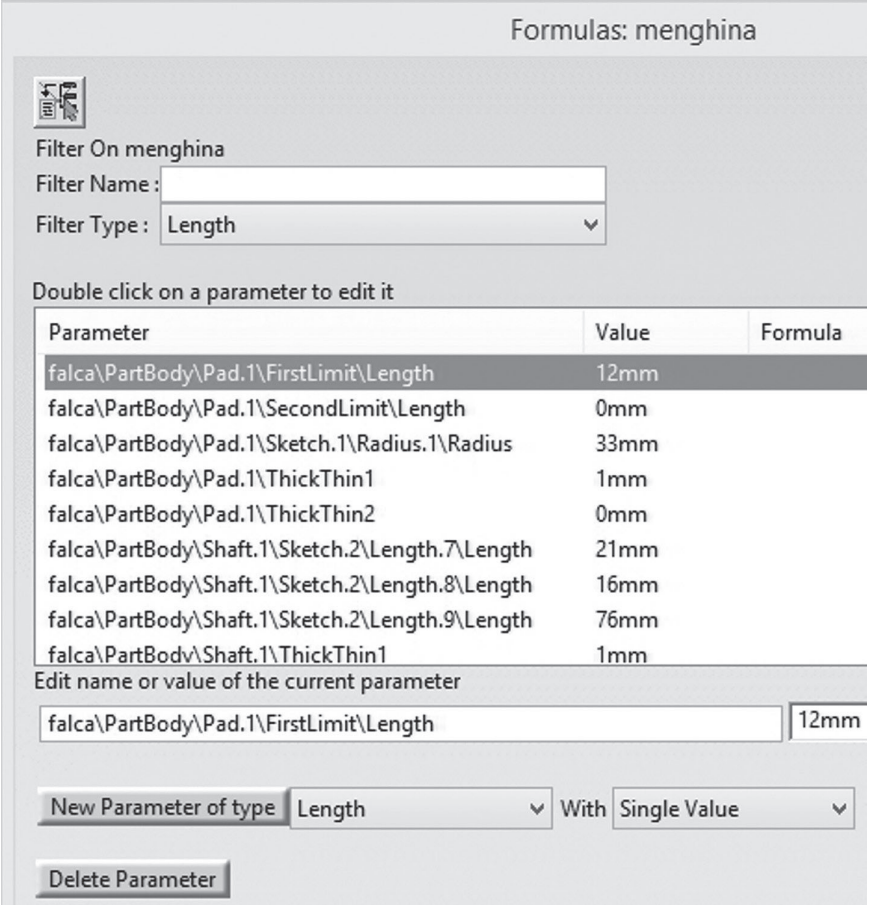


**FIGURE 2.20** Content of the *Formula* dialog box showing the names and values of parameters of type *Length*.

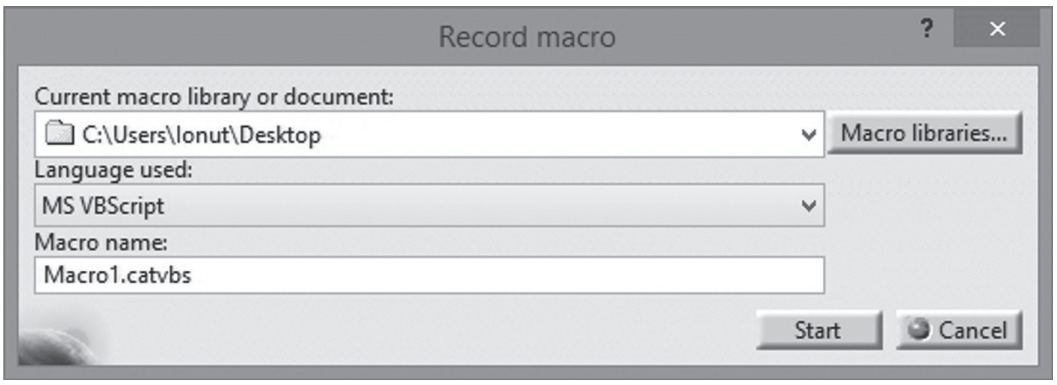


**FIGURE 2.21** Preparing to record a macro.

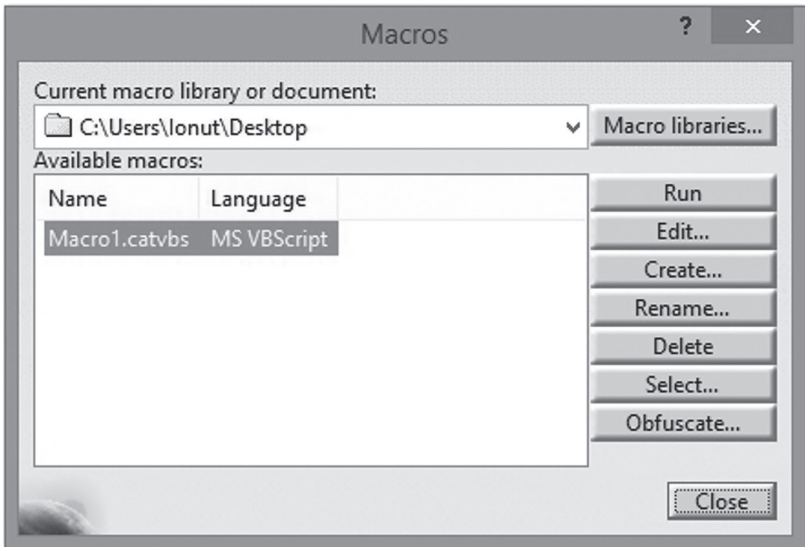


**FIGURE 2.22** List of the available macros and the buttons to work with them.

The *Commands* tab of the *Customize* dialog box contains the list of menus and their options/commands, and the user can define the icon for each, and also the shortcut in the keys for quick access.

The most important option of the *Options* tab is related to the language in which the program runs: *User Interface Language* (Figure 2.24).

Also, checking the *Tooltips* option has the role of familiarizing the user with the names of the instruments by displaying a small information box when hovering the mouse over the icon.

The establishment of a fixed position in the interface for a toolbar is done with the option *Lock Toolbar Position*. This is useful when changing the display resolution on the monitor.

All selections and options changes made by the user in the *Options* tab require *CATIA v5* to restart to take the effect of the new set-up.

In the *Tools* menu, there is *Options*; its use opens a very important and complex dialog box with the same name. The user must be aware of the role of certain selections and settings that are useful in most stages of working with the *CATIA v5* program. Throughout this book, some of the options are presented, and some important ones are mentioned below.

The choice of the background colours and of the object manipulation are made from the *General → Display* category, the *Visualization* tab (Figure 2.25). The *Performance* tab sets the 2D and 3D accuracy options, the levels of detail and the transparency of the objects/models in progress.

Performance settings are very useful when running the program on poorly equipped computing systems (low RAM, older generation microprocessor, integrated video card, etc.). Reducing the details will considerably increase the working speed.

The establishment of the measurement and, implicitly, of the working units is done from the category *General → Parameters and Measure*, *Units* tab (Figure 2.26). In the *Knowledge* tab, the user will check the *With value* and *With formula* options so that the parameters defined in the *Knowledge Advisor* workbench are displayed in the specification tree.

The *Report Generation* tab can specify the format in which *CATIA* should generate the report files, and also what it should contain.

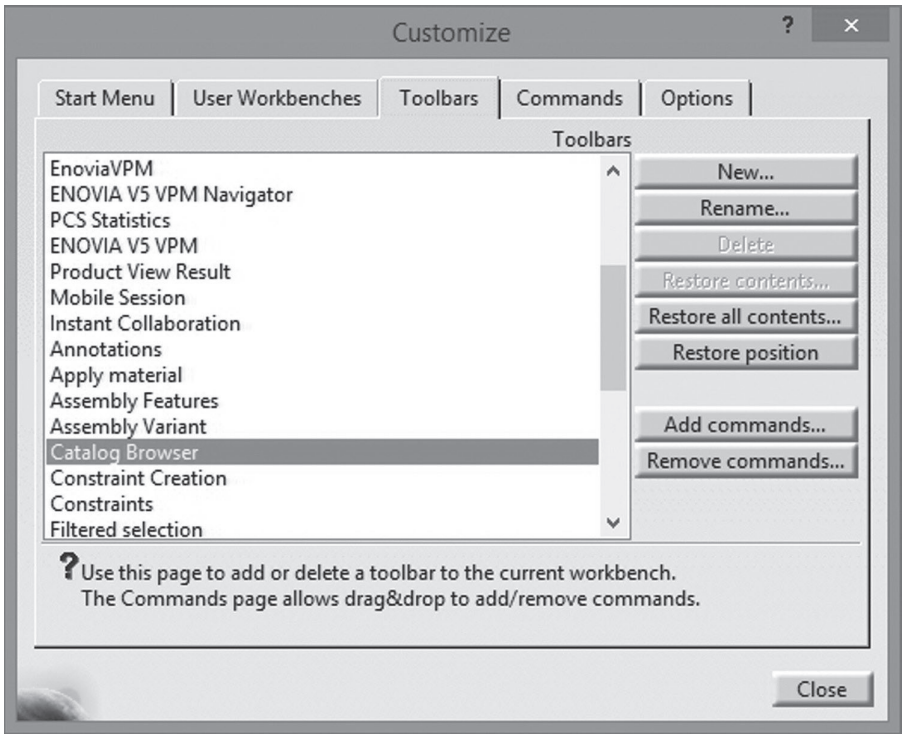


**FIGURE 2.23** *Customize* dialog box with options to personalize the program.

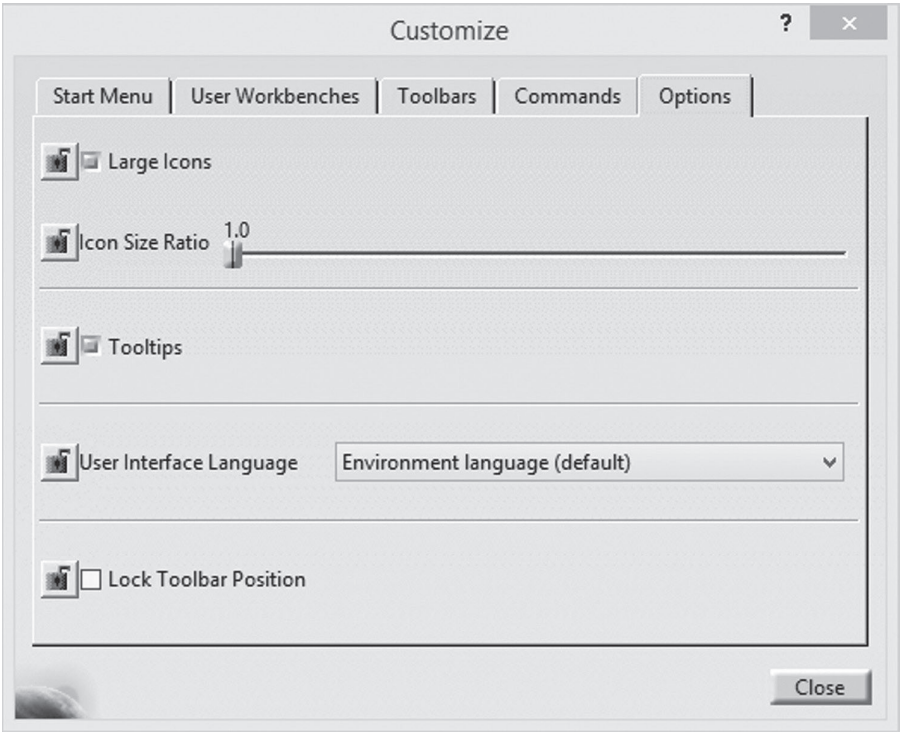


**FIGURE 2.24** Showing the tooltips and choosing the program's language.

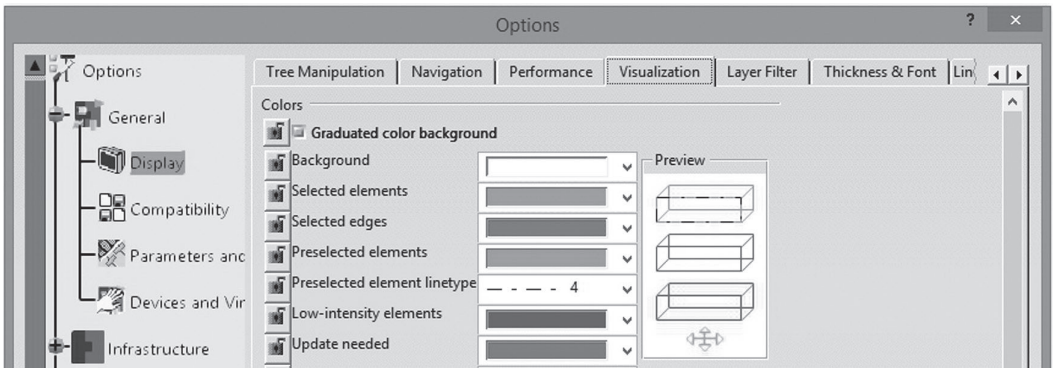


**FIGURE 2.25** Choosing the colours for background, selected elements and edges.

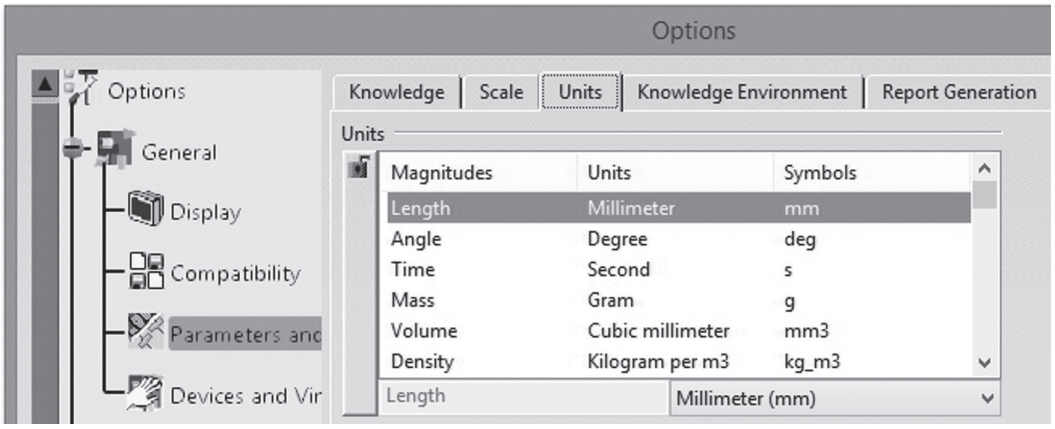


**FIGURE 2.26** Choosing the measurement units.

The *Parameters Tolerance* tab sets the maximum and minimum tolerances for lengths and angles, and the *Constraints and Dimensions* tab (not shown in Figure 2.26) chooses the colours for constraints, when a profile is correctly constrained or not (over-constrained or under-constrained), etc.

Also, the constraints, parameters and relations created by the user are displayed in the specification tree if their options are checked in the *Infrastructure* → *Part Infrastructure* category, *Display* tab (Figure 2.27).

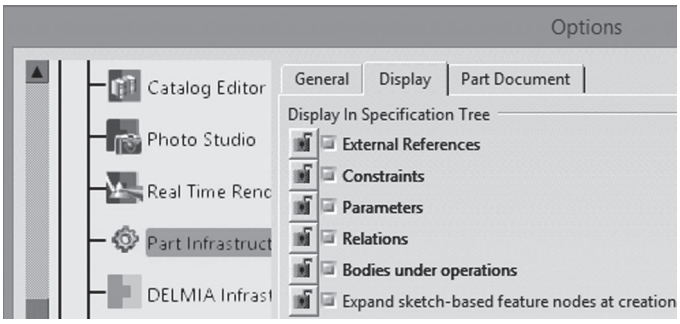


**FIGURE 2.27** Checking the options to display constraints, parameters and relations in the specification tree.

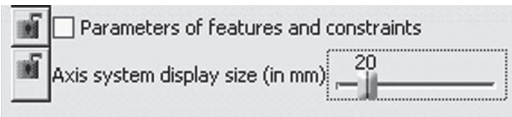


**FIGURE 2.28** Changing the axis system display size.

Also, in this tab, there is another option, *Axis system display size*, presented as a slider (Figure 2.28), through which the user establishes the dimensions of the orthogonal plane system, regardless of the program workbench in which he works.

Numerous options and settings are found and used in the *Mechanical Design* category for modelling parts and assemblies.

Thus, in the case of assemblies, it is necessary to update the assembly constraints. From *Mechanical Design* → *Assembly Design*, *General* tab (Figure 2.29), the user chooses how to perform this update: in automatic or manual mode. The *Manual* mode is recommended because the user performs various actions with the components of the assembly (translations, rotations, etc.), and the update will take place at the end. The *Update* icon is also visible in the figure.

In the *Constraints* tab (Figure 2.30), the options for inserting the duplicate components in an assembly are chosen, if the components are already constrained. It is recommended to keep the default setting, *Without the assembly constraints*, in the *Paste components* area (components are

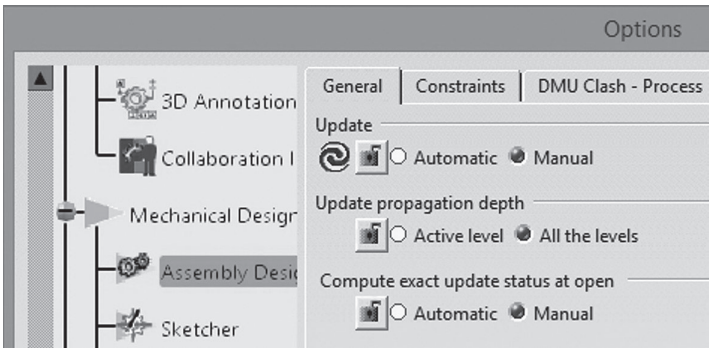


**FIGURE 2.29** Setting the *Automatic* or *Manual* update mode.

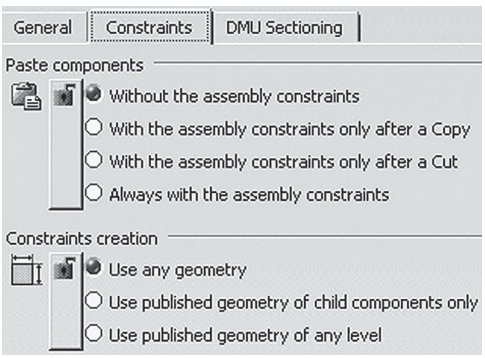


**FIGURE 2.30** Setting how the constraints of an assembly will work.

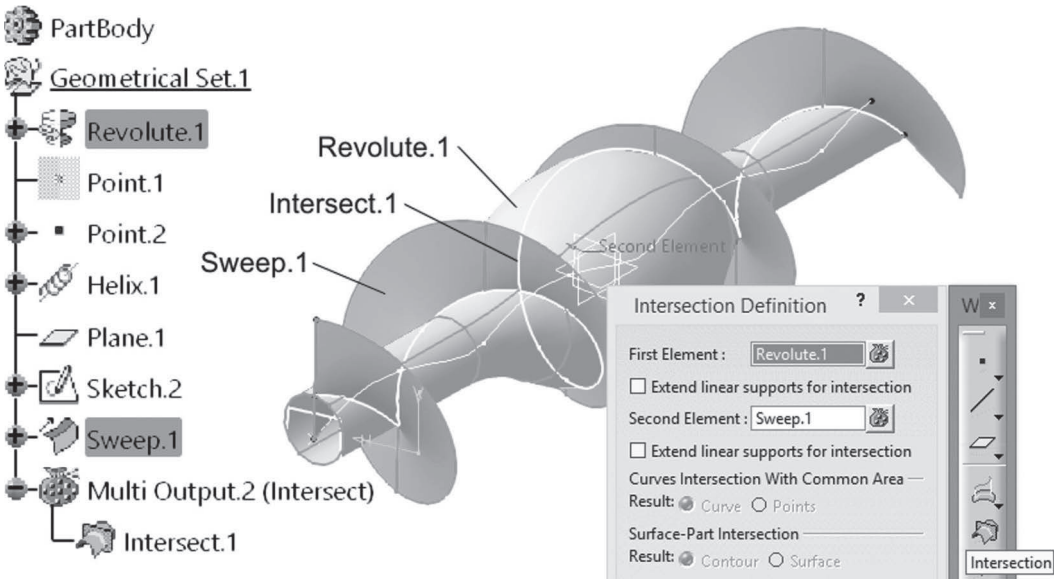


**FIGURE 3.139** Intersecting the two surfaces to obtain their intersection curve – *Intersect.1*.

Returning to the first variant obtained (*Sweep.1* in Figure 3.137), the user will make the intersection with the surface *Revolute.1* (Figure 3.130) by opening the *Intersection Definition* dialog box of the *Intersection* tool. The contact surfaces are selected in the *First Element* and *Second Element* fields.

Figure 3.139 shows the *Intersect.1* curve as the only entity shared by the two surfaces. The user observes the positioning of the curve on the *Revolute.1* surface. This curve, *Intersect.1*, will become the sweep extrusion path of a profile to obtain the spiral.

The user can hide (context menu, *Hide/Show* option) several features already used up to this stage of the application. Thus, *Point.2*, *Helix.1*, *Plane.1*, *Sketch.2* and *Sweep.1* are no longer needed to be displayed and can switch from visible to hidden space. At any time, these hidden features can be viewed (Figure 3.140) by clicking the *Swap visible space* icon on the *View* toolbar at the bottom of the interface.

Using the *Sweep* tool, an R3 mm circle is extruded along the *Intersect.1* curve, as follows: in the *Swept Surface Definition* dialog box, the user chooses *Profile type* as *Circle* (third icon) and *Subtype*: *Center and radius*. The user does not have to draw the circle on the guide curve (selected in the *Center curve* field), but only to enter the radius value, R3 mm. Thus, the tubular and twisted surface, *Sweep.2*, will be added to the specification tree (Figure 3.141).

As an intermediate check, this surface must have an area of 6559.73 mm$^2$ and the *Intersect.1* curve a length of 348 mm.

The *Intersect.1* surface is open at both ends. According to the 2D drawing in Figure 3.125, the ends have a hemispherical shape of radius R3 mm. Thus, at each end of the surface, a sphere with the same radius value will be inserted, and the *Revolute.1* surface can be hidden.

In the *GSD* workbench, the sphere and the cylinder are primitive surfaces and can be created simply by choosing a few parameters: centre, radius, type and delimitation angles for the sphere, point, direction, radius and length of the cylinder.

The user should click the *Sphere* icon on the *Surfaces* toolbar, and the *Sphere Surface Definition* dialog box opens (Figure 3.142). In the *Center* field, he chooses the left end of the *Intersect.1* curve (named *Intersect.1\Vertex.1*), the axis of the sphere is set by default by the program, and the radius of R3 mm is entered. Below, in the *Sphere Limitations* area, are four fields with angular values, available in case the user clicks the icon *Create the sphere by specifying the angles*. However, a sphere feature is inserted in the model by clicking on the adjacent icon, *Create the whole sphere*.

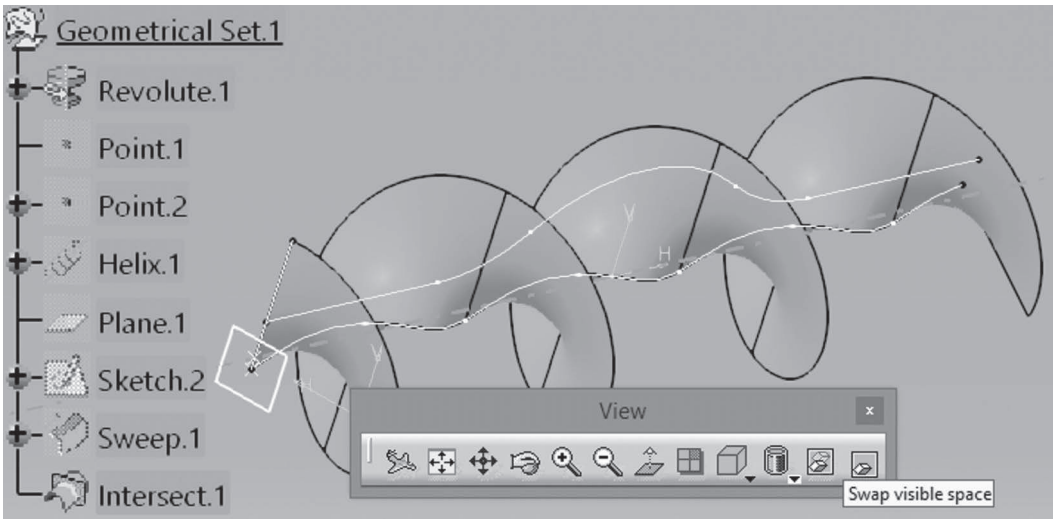


**FIGURE 3.140** Swap visible space to display the hidden features: points, curves, planes and surfaces.

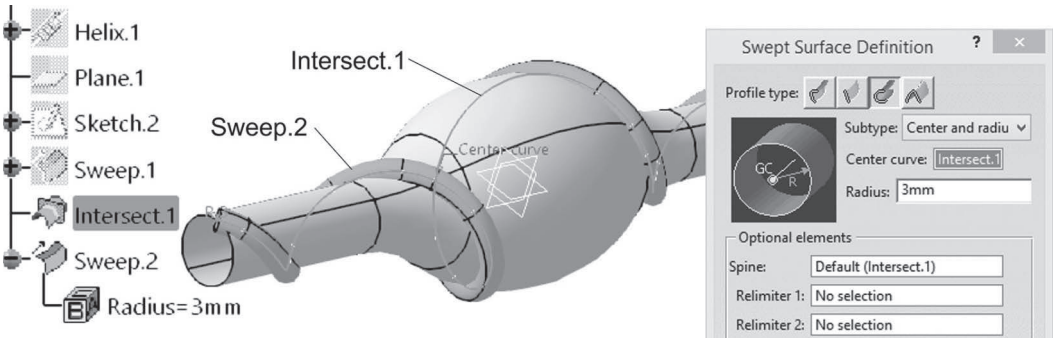


**FIGURE 3.141** Creation of the twisted surface *Sweep.2*.

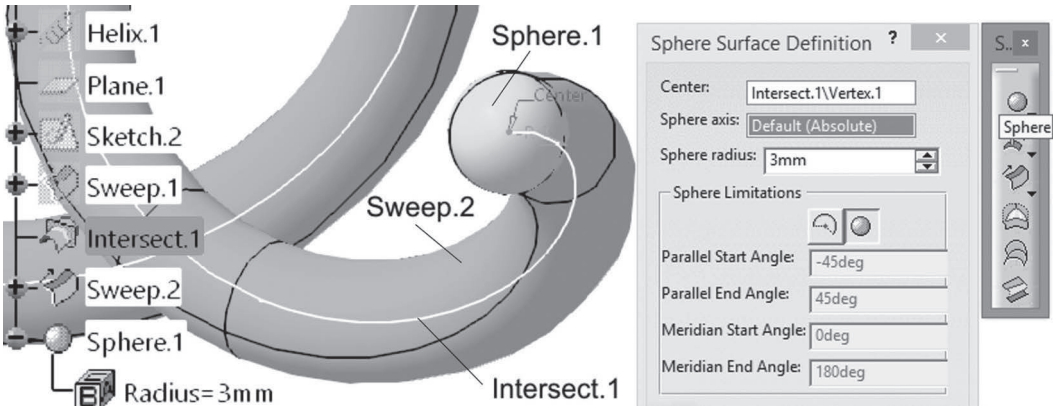


**FIGURE 3.142** Creation of a sphere at the left end of surface *Sweep.2*.

The *Sphere.1* is partially inside the *Sweep.2* surface, so an edit of the sphere is needed to fit in the end of the *Sweep.2* tube. Obviously, from the way they were created, it results that these two surfaces intersect after a curve.

The identification of the curve after which the two surfaces touch is done by applying the *Intersection* tool. In the dialog box in Figure 3.143, in the two fields *First Element* and *Second Element*, the user selects the surfaces *Sphere.1* and *Sweep.2*. If the modelling is correct, the result of the intersection is a curve of length 18.85 mm and radius R3 mm and is named *Intersect.2*. This curve is just the edge at the end of the tube.

The sphere must be cut according to this edge to close the end of the *Sweep.2* surface. Thus, clicking the *Split* icon on the *Operations* toolbar opens the *Split Definition* dialog box (Figure 3.144).

In the *Element to cut* field, the user chooses the sphere and, in the *Cutting elements* list, selects the *Intersect.2* curve. After the cutting operation, the *Split.1* surface results, and in the specification tree, the sphere becomes hidden. The dialog box contains the *Other side* button, so that the sphere can be represented, cut and kept on one side or the other of the intersection curve. Figure 3.144 shows the correct *Split.1* surface.

The method of obtaining the intersection curve between the tubular surface *Sweep.2* and a sphere, *Sphere.2*, positioned at the right end of the *Intersect.1* curve can be similar to the previous one: created by the intersection of the two surfaces. The modelling steps present, however, another variant, by applying the *Boundary* tool in the *Operations* toolbar.

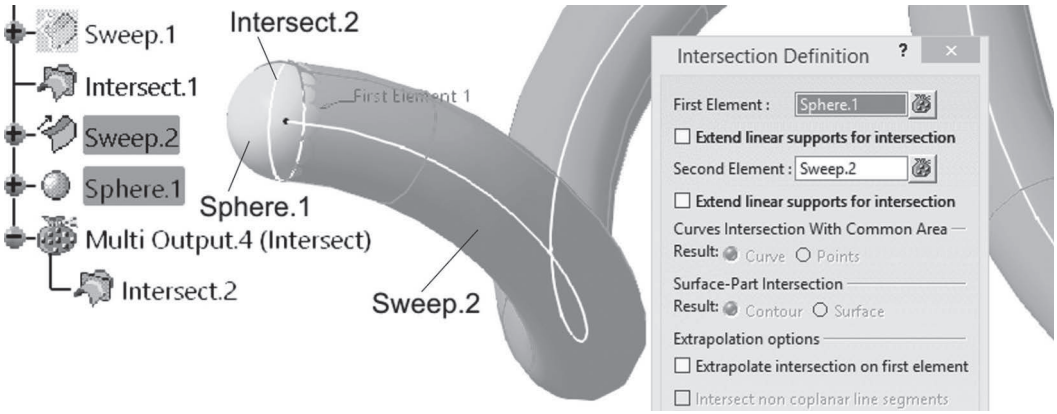


**FIGURE 3.143** Intersection between the sphere and the surface *Sweep.2*.

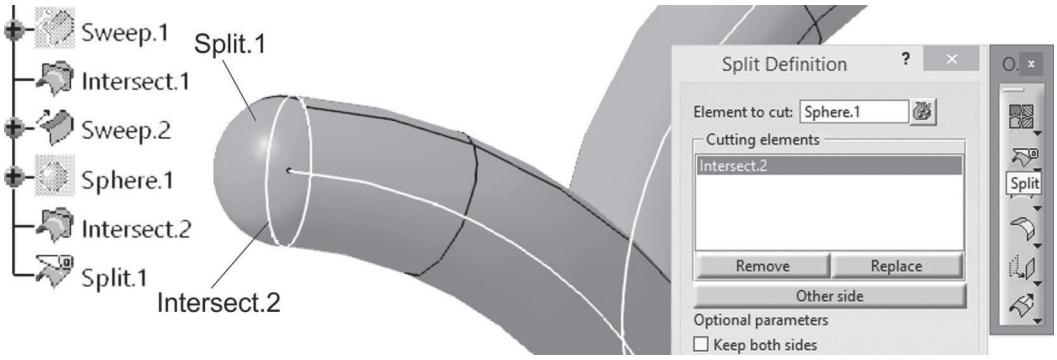


**FIGURE 3.144** The sphere feature was cut with the intersection curve.

In the *Boundary Definition* dialog box (Figure 3.145), the user chooses the *Point continuity* option in the *Propagation type* list and then selects the edge at the end of the tube, named *Sweep.2\Edge.2*. The edge becomes from a 3D element, by extraction, a 2D element, the *Boundary.1* feature. The editing of the sphere with respect to this curve is also done with the help of the *Split* tool, resulting in a closing surface of the tube, named *Split.2*.

By obtaining this surface, the modelling of the spiral elements ends. In the specification tree in Figure 3.146, it is observed that three surfaces are visible and the rest have become hidden. These surfaces, *Sweep.2*, *Split.1* and *Split.2* are joined using the *Join* tool in the *Operation* toolbar to become a single surface, *Join.1*.

In the *Join Definition* dialog box, the user selects the surfaces and then clicks the *Check tangency* and *Check connexity* options in the *Parameters* tab. These options verify if the adjacent surfaces are tangent and that there are no small gaps between them. The checks represent an important stage of the validation of the *Join.1* surface, thus being prepared for the transformation into solid. To comply with our modelling, find out if the resulting surface area is 6672.83 mm$^2$.

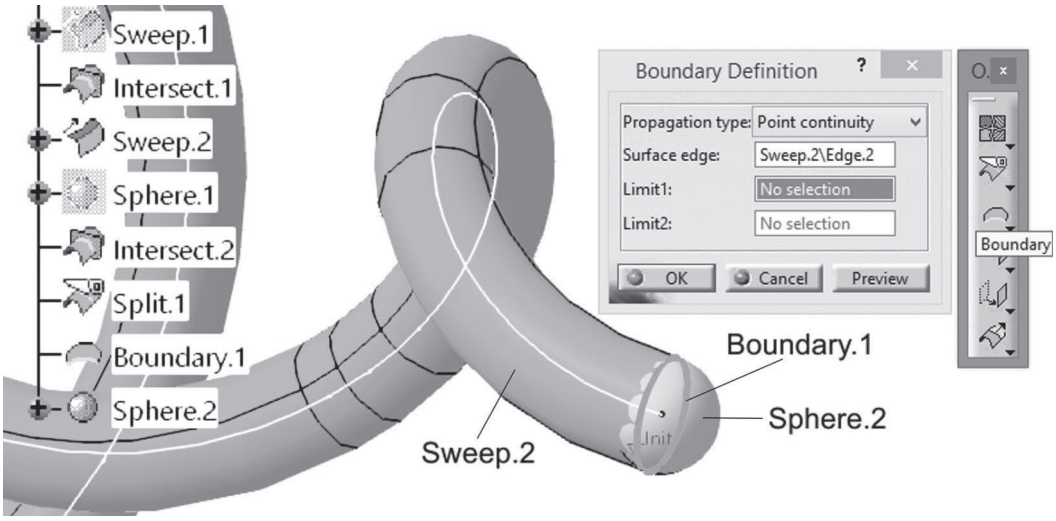


**FIGURE 3.145** The intersection curve is extracted from the end of the *Sweep.2* surface.

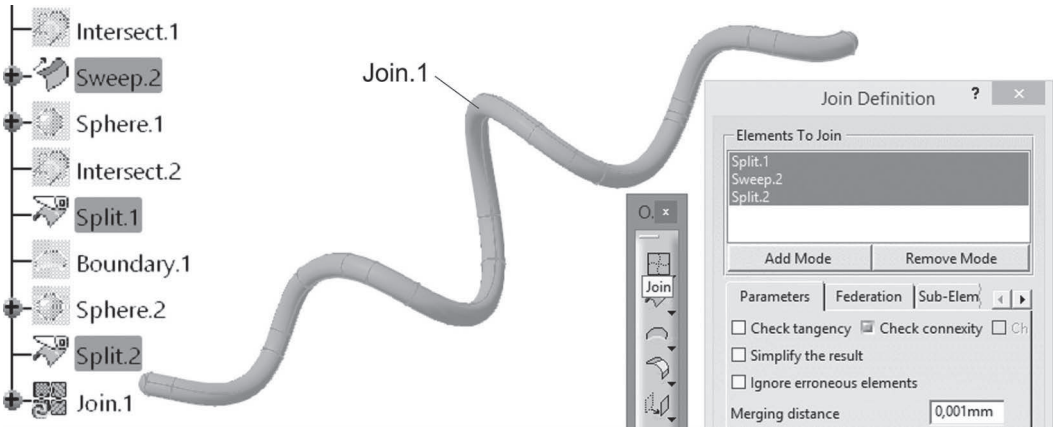


**FIGURE 3.146** Joining surfaces to obtain the first spiral 3D element.

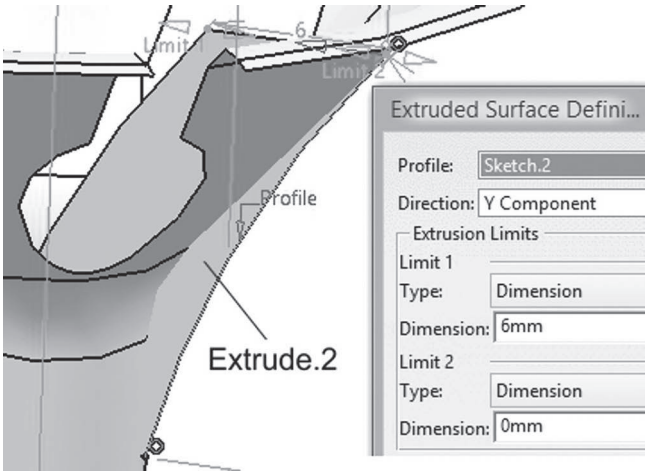


**FIGURE 3.246** Extrusion of the spline curve in the direction of the *Y* axis.

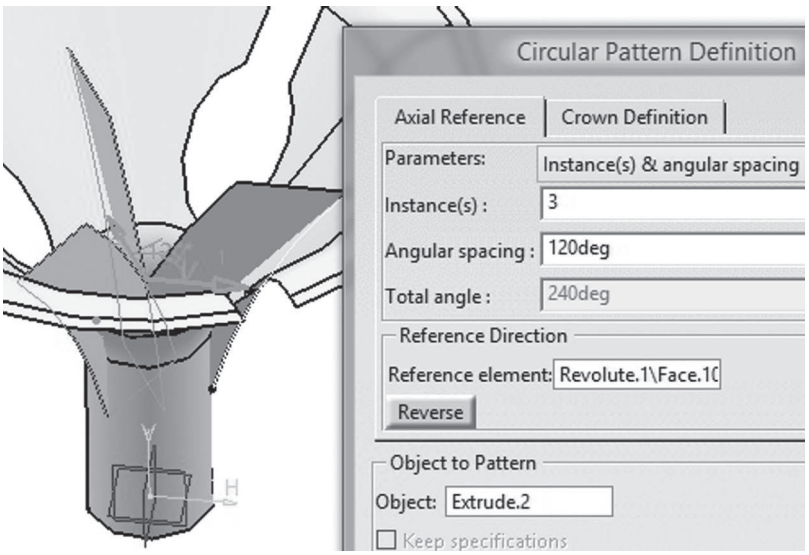


**FIGURE 3.247** Multiplication of the previously extruded surface.

The user joins the two surfaces (*Extrude.2* and *CircPattern.2*) into one using the *Join* tool in the *Operation* toolbar, according to the *Join Definition* dialog box (Figure 3.248).

At this point, the balloon holder contains the *Join.1* and *Split.1* surfaces (created in Figure 3.243). In the *Part Design* workbench, a thickness of 0.1 mm (*First Offset* and *Second Offset*) is added to the *Split.1* surface, symmetrical to it. The *Thick Surface* tool from the *Surface-Based Features* toolbar was used (Figure 3.249), and the result is a solid body with a constant thickness of 0.2 mm.

From the *Insert* menu, a new body (*Body.2*) is added to the part, and it appears in the specification tree on the same level as the *PartBody* (this is the default body in model tree). The user observes that the new body is underlined (Figure 3.250), which means that it is the current (active) body. Whatever will be added by the user in the part structure, it will be placed from now on under this body. Thus, the surface *Join.1* is also transformed into a solid by adding 0.2 mm thickness (Figure 3.251), similarly to the surface *Split.1*.

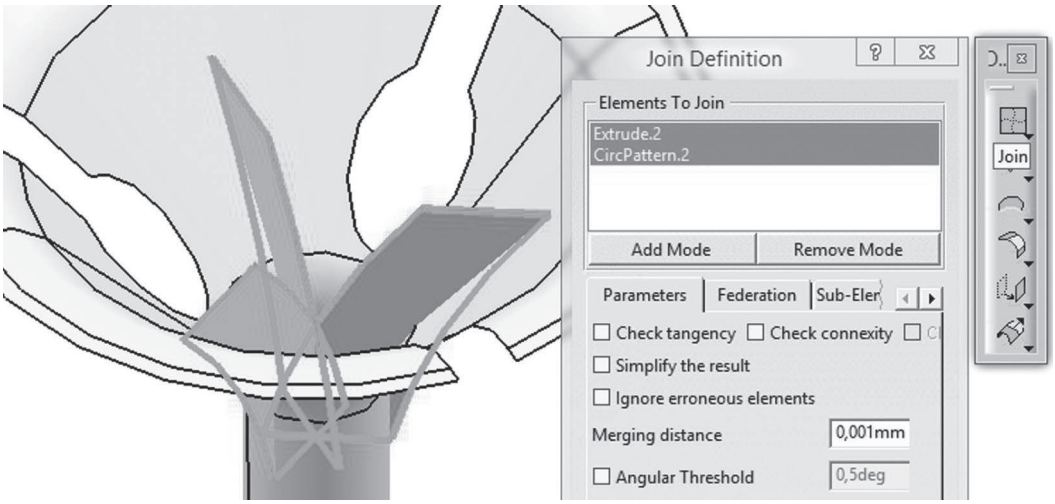


**FIGURE 3.248** Joining the extruded and multiplied surfaces.

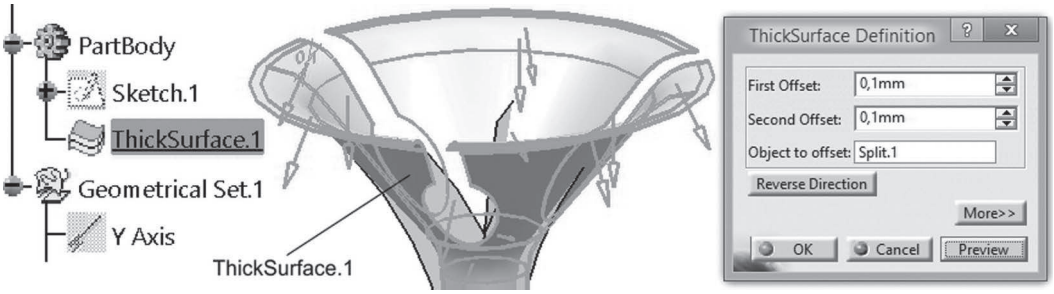


**FIGURE 3.249** Adding solid thickness to the resulted surface.

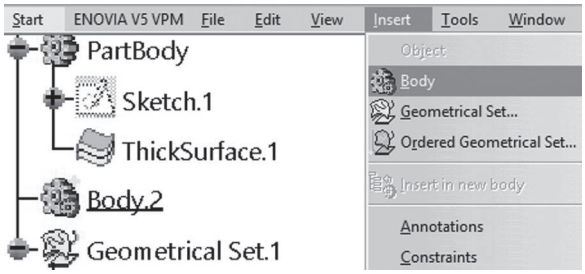


**FIGURE 3.250** Inserting a new body in the specification tree of the current 3D model.

The place of the two surfaces is taken by the *ThickSurface.1* and *ThickSurface.2* solids, as seen in the figure. Surfaces can be hidden because they are no longer needed to be visible in the following steps.

Switching between *PartBody* and *Body.2* in terms of editing and/or adding new elements/features (which of the two bodies to become current) is done by right-clicking on the selected body, and from the context menu, the user chooses the option *Define In Work Object*. The underline shifts from one body to another and then descends to the last feature of the specified body. Figure 3.251 shows how the solid was underlined when the *ThickSurface.2* solid was added to the *Body.2*.

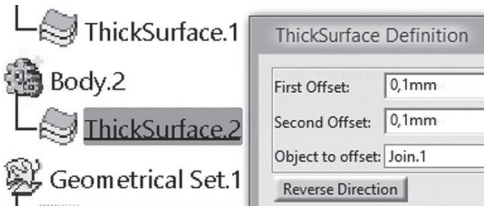


**FIGURE 3.251** Specifying the current body to work on and how to add thickness to a surface.

The two bodies (*PartBody* and *Body.2*) can be combined using the *Boolean* operation *Union Trim* found in the *Insert* → *Boolean Operations* menu or in the toolbar with the same name.

By pressing the *Union Trim* icon, no dialog box is initially displayed; the user is asked in the area above the *Start* button of the *Windows* operating system (Figure 3.252) which body will be trim edited (from which it will be cut). With the selection of the *Body.2*, the *Trim Definition* dialog box becomes available (Figure 3.253).

The *Trim* field is already filled in with the *Body.2*, the *with* field is filled in automatically with *PartBody*, and the user must select the faces that will be removed when the *OK* button is pressed. Figure 3.253 shows these faces, areas of the *Body.2* located inside the *PartBody*. For the last field (*Faces to keep*), the user can select the surfaces outside the *PartBody* (as seen in Figures 3.246 and 3.247) or can leave the field unselected. These selections determine what is cut and what is kept. The colours of the selection are different: purple for *Faces to remove* and blue for *Faces to keep*.

The two bodies are joined into a single one by the *Trim.1* feature (Figure 3.254). It is noted that it is still possible to edit the *Body.2* if the user considers this as necessary.

Between the *PartBody* and the *Body.2*, some intersection edges are created, two of them being marked in Figure 3.254. These edges belong at this point to the *PartBody* solid feature.

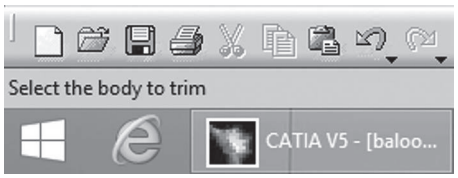


**FIGURE 3.252** Message for the user to select the body to trim.

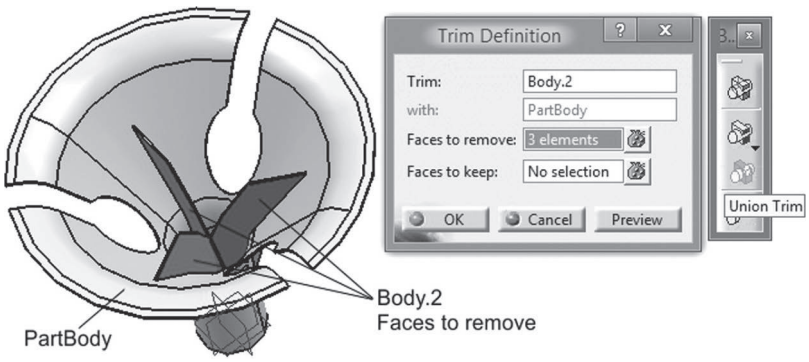


**FIGURE 3.253** Applying the *Union Trim* tool to cut and join two solid bodies of the support.

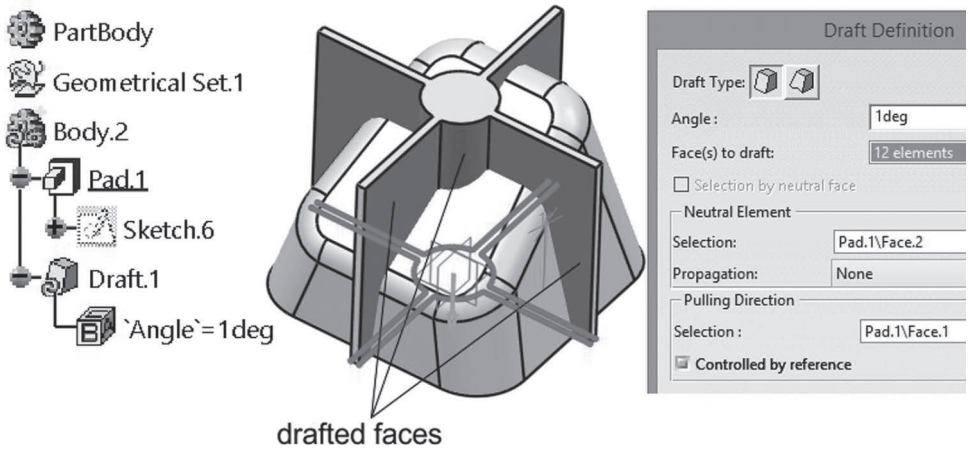


**FIGURE 3.335** Selection of faces to be drafted.

The *Angle* and *Second limit* options in the *Draft* area are checked, and then a value of –1° is entered to set the inclination.

The angle value is negative because only through this parameter the inclination can be controlled. Pressing the arrow tip (pointing downwards) causes the extrusion and inclination to be created below the *XY Plane* that contains the profile. The *Radius* options in the *Fillets* area must also be unchecked because the features contained in the *Body.2* do not have fillets.

The specification tree is updated in both cases with the features *Pad.1* and *Draft.1*.

A *Union Trim* operation is performed between *Body.2* and *PartBody* to combine the two bodies. Thus, in the *Trim Definition* selection box (Figure 3.338), *Body.2* is selected in the *Trim* field and the *With* field is automatically filled in with *PartBody* (non-editable field). The *Faces to keep* field contains five side end surfaces and the upper face of the *Body.2* (three of these surfaces are marked in the figure). The *Faces to keep* field contains outer surfaces of the *PartBody* (marked also on the figure).

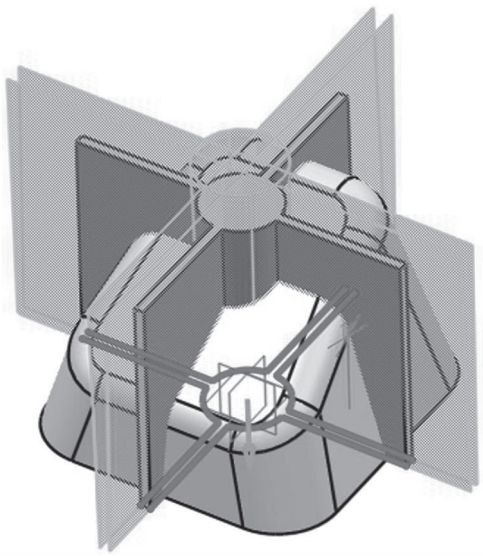

**FIGURE 3.336** Direction of drafting and a preview on how the faces will be inclined.

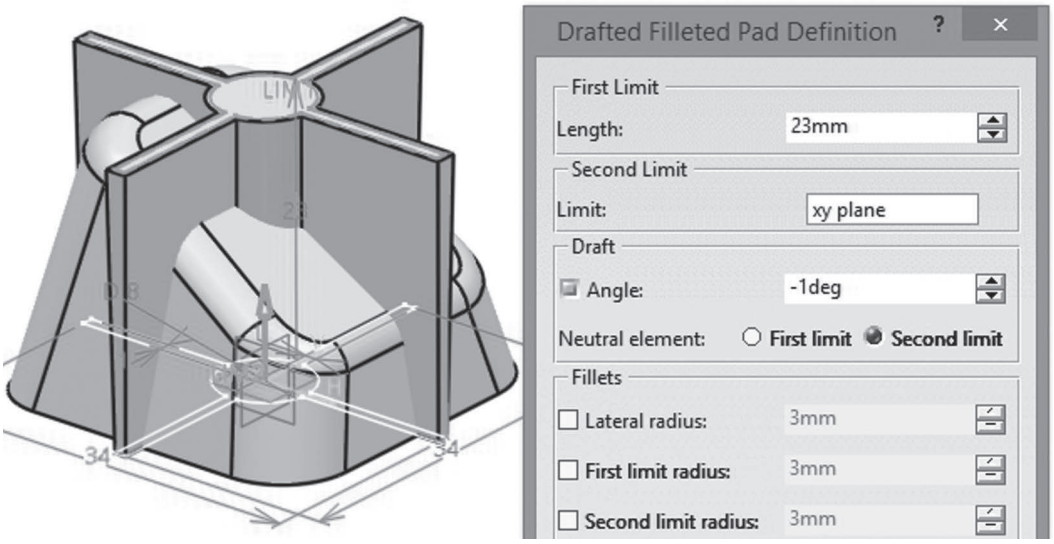


**FIGURE 3.337** Creating a drafted pad.

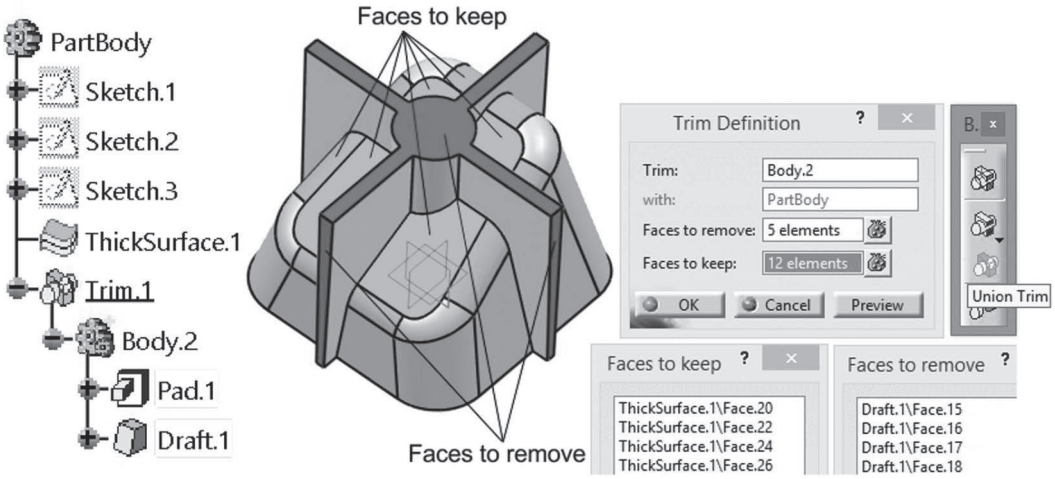


**FIGURE 3.338** Selection of faces to keep and faces to remove for the *Union Trim* operation.

When selecting surfaces (which will be removed and/or kept), they will change colour; for example, the removed surfaces become purple and the retained ones become light blue.

Following the union trim of the two bodies, *Body.2* is included in the *PartBody* structure under the *Trim.1* feature in the specification tree (Figure 3.338). Only the geometry placed inside the button part remains from *Body.2*.

Due to the way in which the *Thickness* of the *EdgeFillet.1* surface was added (inwards, Figure 3.332), the lower edge of the solid exceeds the *XY Plane* and the inner faces (obtained by combining with *Body.2*), as it is presented in Figure 3.339. The figure shows, for instance, two areas (of the four existing ones) in which the difference between the edges is illustrated.

It is, therefore, necessary to cut the edge of the part to be brought into the *XY Plane*. The fastest solution is to use the *Split* tool of the *Surface-Based Features* toolbar. In the *Split Definition* selection box, the user chooses the *XY Plane* in the *Splitting Element* field. The arrow that defines what to be kept must be positioned with the tip inwards. Following the elimination of the volume beyond the *XY Plane*, a continuous surface results, a fragment of it is shown in Figure 3.340.

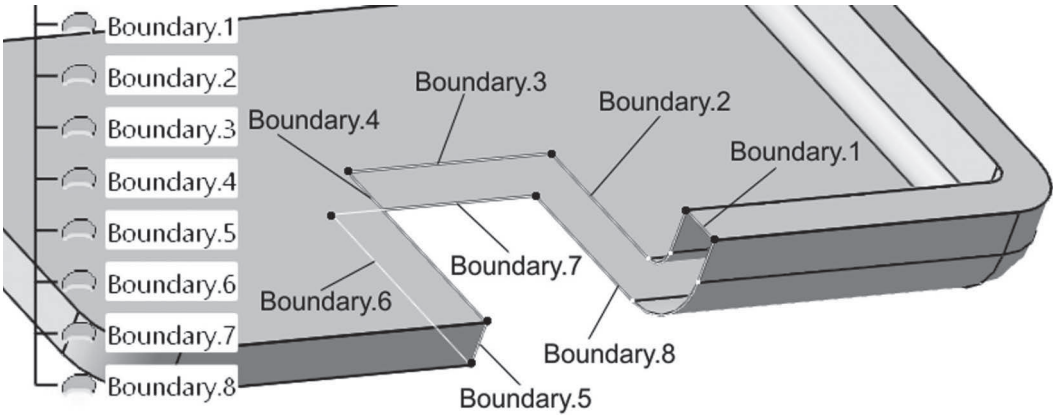


**FIGURE 3.409** Displaying the *Extract* result.

The *Boundary.2* and *Boundary.8* edges consist of two lines and a circular arc; all other edges are drawn as lines. Each extracted edge has two black dots at the ends, meaning that the elements are individual and do not form a connected contour.

The first surface that encloses the cut area is created using the *Blend* tool. In the *Blend Definition* dialog box (Figure 3.410), in the fields *First Curve* and *Second Curve*, the user should select the extracted edges *Boundary.5* and, respectively, *Boundary.1*. The selection can be stopped here as well, but the surface obtained *Blend.1* would not be tangent (as it is correctly presented in the 2D drawing) to the extracted surfaces *Extract.4* and, respectively, *Extract.1*. Thus, they must be selected in the *First Support* and *Second Support* fields. In the *Basic* tab, for a good continuity of the cut surfaces, in drop-down lists the user should choose the *Tangency* option.

At the end of the selections, two red arrows appear on each edge of the surface *Blend.1* and they control the way the surface is formed. Shorter arrows should point to the newly created surface *Blend.1*, and both long arrows should point in the same direction, inward or outward. The surface *Blend.1* is, according to Figure 3.410, twisted by 90° and tangent to the support surfaces specified by the user.

The two long edges of the surface are also extracted using the *Boundary* tool, and the features *Boundary.9* and *Boundary.10* result (Figure 3.411).

The choice of the selected edge propagation option can be *No propagation* or *Tangent continuity*. In the case of a more complex selection, the endpoints of an edge to be extracted are set in the *Limit1* and *Limit2* fields.

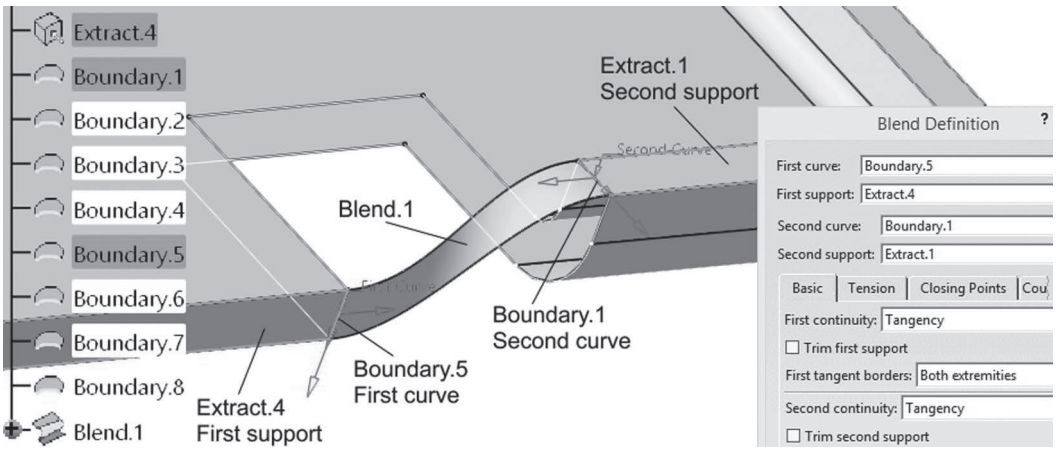


**FIGURE 3.410** Creating a blended surface.

The cut area will be closed with two patches, as follows: on the upper surface (*Extract.3*) of the part are the extracted edges *Boundary.2*, *Boundary.3*, *Boundary.4* and *Boundary.9*, and on the bottom surface (*Extract.2*, Figure 3.408) edges *Boundary.6*, *Boundary.7*, *Boundary.8* and *Boundary.10*. All these edges represent the contours of the two patches.

For the top edges to form a surface, the *Multi-Sections Surface* tool in the *Surfaces* toolbar is used.

The selection box in Figure 3.412 contains two main fields: the first (*Section*) contains the sections through which the surface passes, and the second (*Guide*) contains the guidance curves between these sections. These are, in fact, individual curves, which do not intersect, conveniently positioned in certain planes of the workspace, and the contour of the created surface will have their exact shape as it passes through those planes. From one section to another, the program extrapolates the surface to keep it continuous and tangent to other user-selected surfaces.

To create the closing surface in the figure, the user selects the *Boundary.4* and *Boundary.2* edges in the *Section* column, and then the *Extract.3* surface for tangency/continuity.

This means that the program must initiate a *Multi-sections Surface.1* starting from the simple edge *Boundary.4*, tangent to the surface *Extract.3*, to the more complex edge *Boundary.4* and remaining tangent to the same flat surface *Extract.3*. The two edges/sections are very different, and the task of the program is not simple at all, but it is possible by selecting the two guide curves *Boundary.3* and *Boundary.9*. For the first guiding curve, the tangent direction is specified as *Extract.3*.

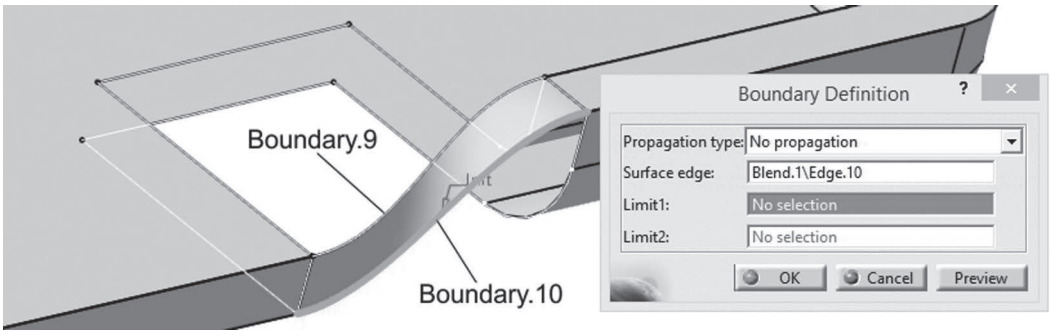


**FIGURE 3.411** Creating two more boundaries from the blended surface.

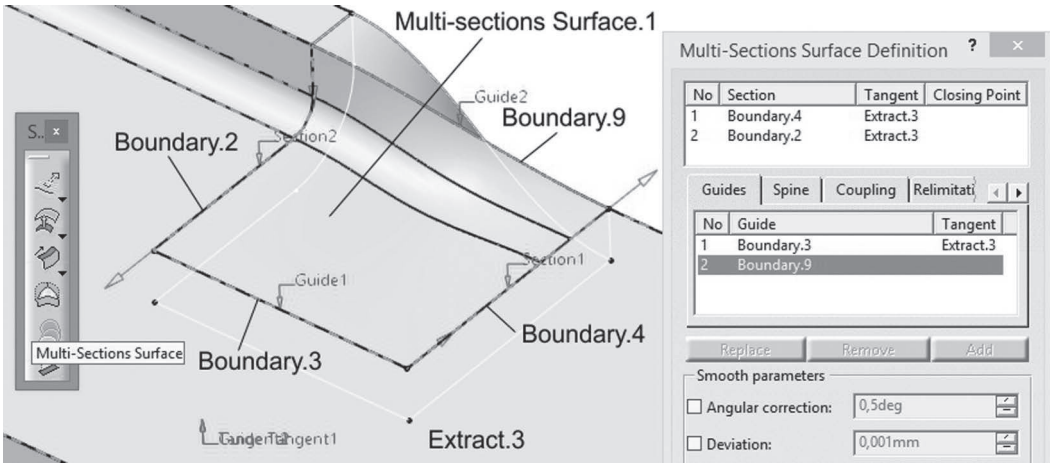


**FIGURE 3.412** Creating the first *Multi-Sections Surface* feature.

The projection type (*Normal*) and the *Nearest solution* option are checked. The projection of the point on the selected edge can be only done in this way, without selecting a certain direction, because a line (which will be drawn in the next step) that joins the two points is not along an implicit direction of any of the axis *X*, *Y* or *Z*. Only after drawing the line, it can be considered and selected as a possible direction. Basically, the point marked in the figure is projected perpendicular to the nearest position on the edge.

A line is drawn between the two points using the *Point-Point* option (Figure 3.430). In that case, the line is not on *Surface.10* (Figure 3.428) and therefore cannot be used for its editing. The line is then projected on this surface, according to Figure 3.431.

The specification tree is updated with the features *Project.1* (point on the right edge), *Line.1* and *Project.2*. The line and point can be hidden (*Hide/Show* option in the context menu). The *Surface.10* is divided into two areas using the *Split* tool: one area is kept (the lower one, Figure 3.432) and the other one is removed (the upper one). The appropriate area selection is possible by pressing the *Other side* button in the *Split Definition* selection box. The removed area is previewed by transparent representation.

The *Multi Output (Split)* feature is currently visible in the specification tree because the user has not yet selected the area/surface to be kept or the one to be removed, so there are two selection options (by pressing the *Other side* button). Once the confirmation of the kept area has been received, it is added to the tree as the feature *Split.1*.

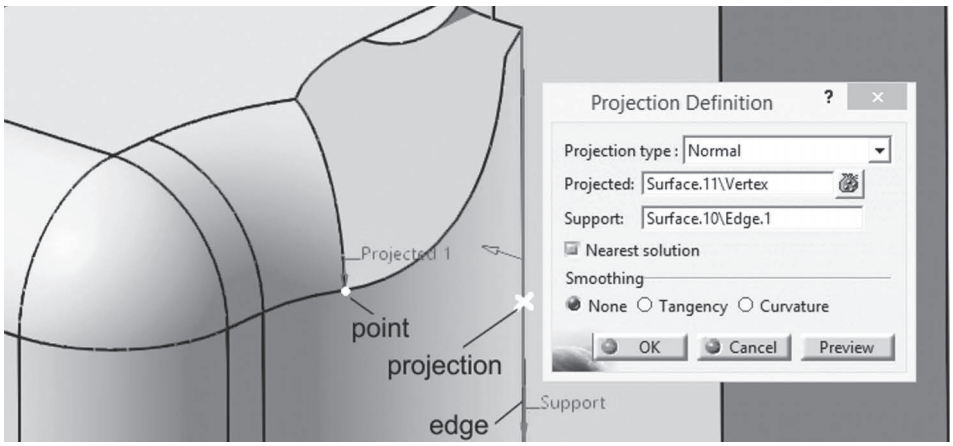


**FIGURE 3.429** The projection of a point on an edge.

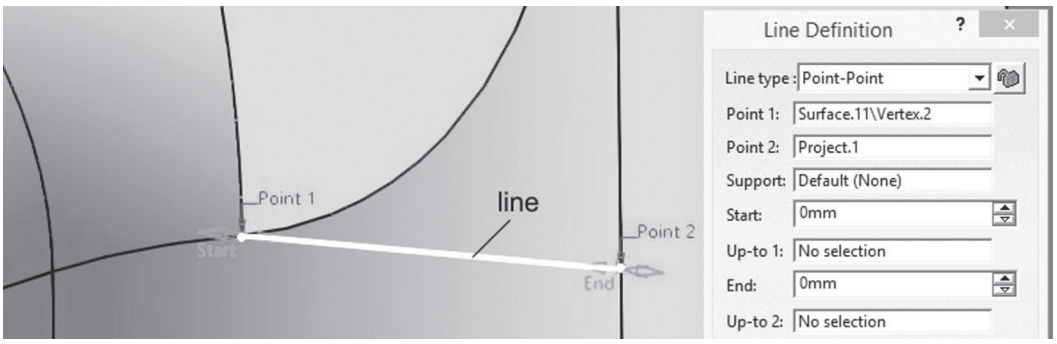


**FIGURE 3.430** Drawing a line between a point and its projection.

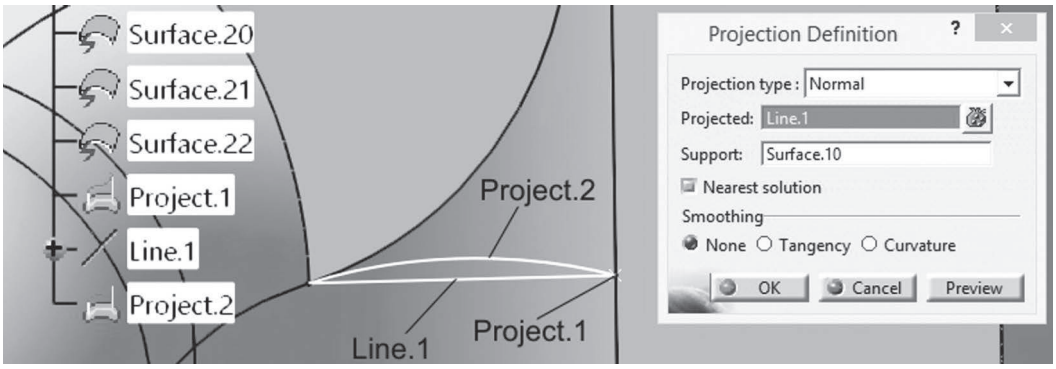


**FIGURE 3.431** Projecting a line on a surface.

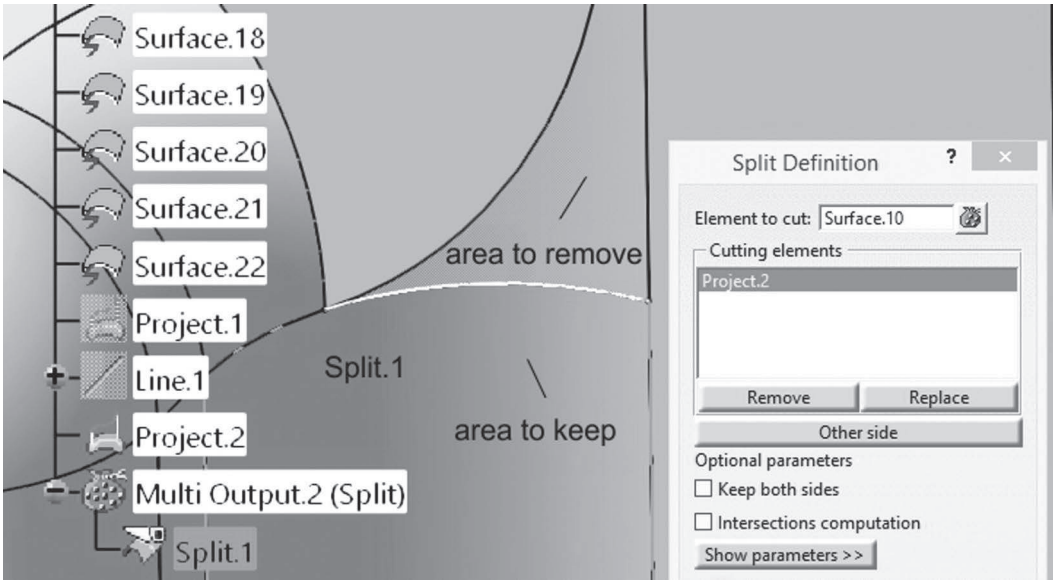


**FIGURE 3.432** Applying the *Split* tool on the *Surface.10*.

However, there are also cases in which the aim is to keep both resulted surfaces using the *Split* tool, by checking the *Keep both sides* option. Thus, two features appear in the specification tree, *Split.1* and *Split.2*.

*Surface.18* (Figure 3.428) is similarly edited using the *Split* tool, and implementing as *Cutting elements* the *Line.2* that joins the ends of curved edges (Figure 3.433).

The line is drawn using the same *Point-Point* option as before. In the *Support* field, the user can also keep the default selection (*Default None*) or choose the *Surface.18*.

Using the *Split* tool (*Split Definition* box, Figure 3.434) and selecting *Line.2* (*Cutting elements*) as the separating element, the user can edit *Surface.18* (*Element to cut*) to result in the rectangular surface *Split.2*.

*Surface.11* must be also removed. It is not possible to simply delete it from the specification tree or with the *Delete* option in the context menu because at least two descending elements (children) are connected to this surface: *Line.1* and *Project.1*.

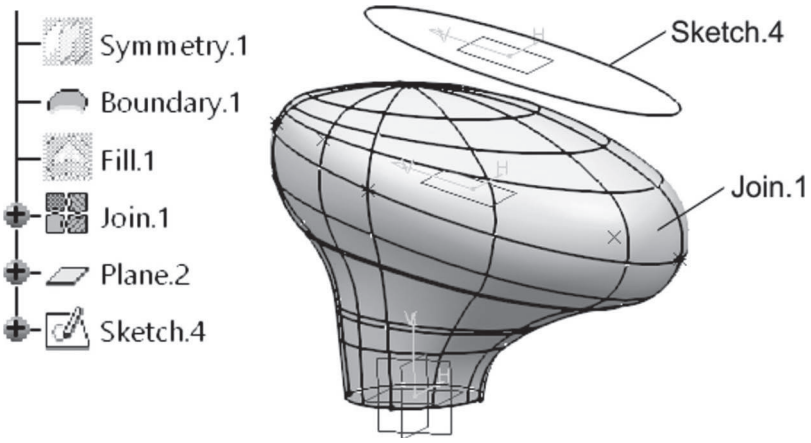


**FIGURE 3.479** Displaying the surface *Join.1* and the *Sketch.4*.

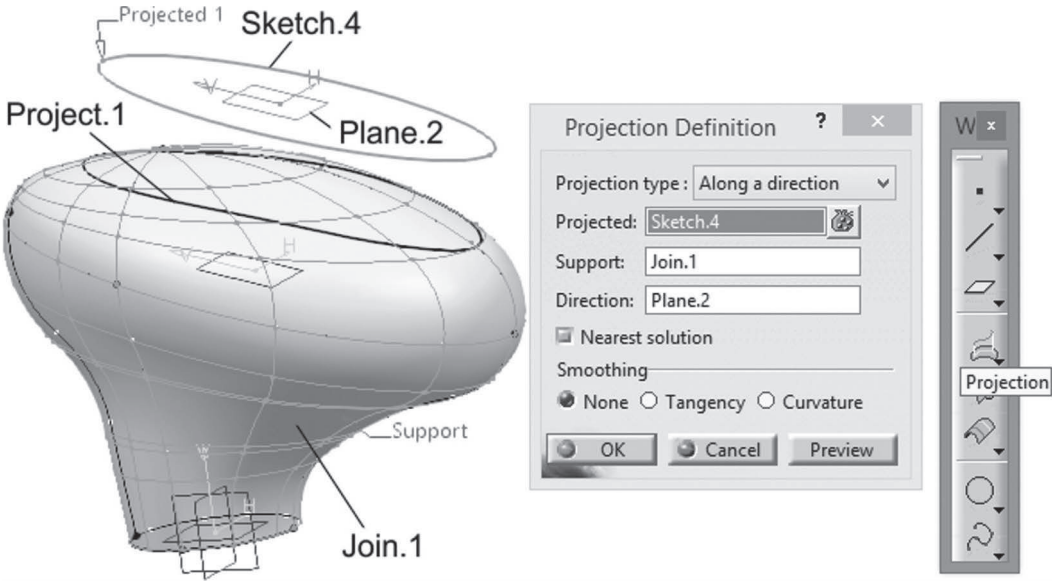


**FIGURE 3.480** Creating the project of the *Sketch.4* onto the *Join.1* surface.

Thus, the *Sketch.4* is projected onto the surface of the part using the *Projection* tool in the *Wireframe* toolbar. Figure 3.480 shows the *Projection Definition* selection box, and from the *Projection type* drop-down list, the user chooses the *Along a direction* option.

As the projection of the ellipse (selected in the *Projected* field) will be done in a direction perpendicular to the *Plane.2*, according to the view *B* in Figure 3.445, the user must choose this plane in the *Direction* field. The surface on which the ellipse is projected is *Join.1*, selected in the *Support* field. As a result, a 3D curve, *Project.1*, is created on the surface of the previously generated surface part.

Once the projection is done, the ellipse and other features that were involved in creating the surfaces model can be hidden, such as *Split.1*, *Split.2*, *Sketch.2*, *Circle.1*, *Extract.1*, *Extract.2*, *Plane.1*, *Intersect.1*, *Intersect.2*, *Intersect.3*, *Sketch.3*, *Plane.2*, *Sketch.4* and *Boundary.1*, as defined above.

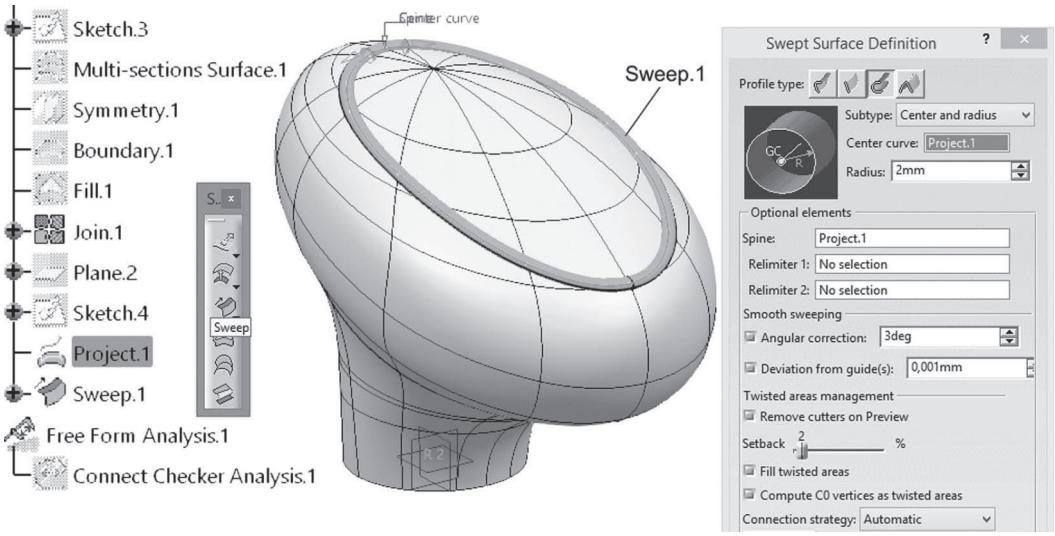


**FIGURE 3.481** Creating a swept surface with the implicit profile *Circle*.

Along this curve, a circle moves to create a certain tubular surface, which will be extracted from the *Join.1* surface. There are several ways to get the surface from the top of the part, but the fastest one is to use the *Sweep* tool in the *Surfaces* toolbar. In the dialog box shown in Figure 3.481, the user can observe the *Circle* icon selected from the *Profile type* area. The user can also choose the *Center and radius* option from the *Subtype* drop-down list and then selects the *Project.1* feature for the guidance curve in the *Center curves* and *Spine* fields. The radius of the tubular surface is R2 mm according to the 2D drawing in Figure 3.445, section *A-A*.

The *Project.1* curve may seem relatively simple, but obtaining it on the *Join.1* surface causes some potential tangency problems between successive component segments of the curve. Thus, to avoid the error messages obtained by pressing the *OK* and/or *Preview* buttons, the user enters a value of 3° in the *Angular correction* field, the other options being checked according to Figure 3.481.

The *Sweep.1* surface is added to the specification tree, and it is observed that it follows correctly the shape and curvature of the *Join.1* surface. Editing is performed between the two surfaces using the *Trim* tool in the *Operations* toolbar. In the *Trim Definition* selection box, the user selects the surfaces and then presses the *Other side/next element/previous element* buttons until the correct cutting solution is obtained (Figure 3.482). This way the *Sweep.1* surface is extracted from *Join.1*.

The resulting surface, *Trim.1*, is added to the specification tree and displayed by three orientations in Figure 3.483. For checking purposes, the area of this surface is 41145.04 mm$^2$. The user can transform the *Trim.1* surface into a solid body (volume: 647,770.11 mm$^3$) to complete the hybrid modelling of this part by using the *Close Surface* tool in the *Volumes* toolbar.

The 3D modelling of this gearbox shifter knob is of medium-high complexity, given by the initial profiles (*Sketch.1* and *Sketch.2*), the creation of the *Sketch.3* and, especially, the understanding of the part shape that required performing many working steps with wireframe and surface features.

The user can change the dimensions shown in Figure 3.445 to obtain other constructive solutions of this gearbox shifter knob.

A modelling version is also presented in the video solution: https://youtu.be/oH47PD9rp-g.

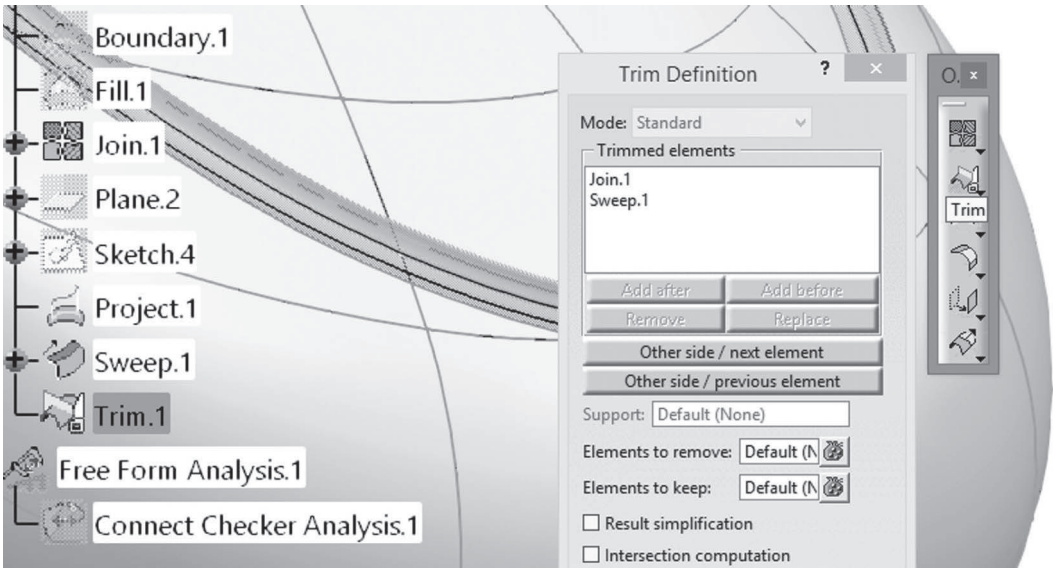


**FIGURE 3.482** Editing the part by applying a *Trim* operation on selected surfaces.

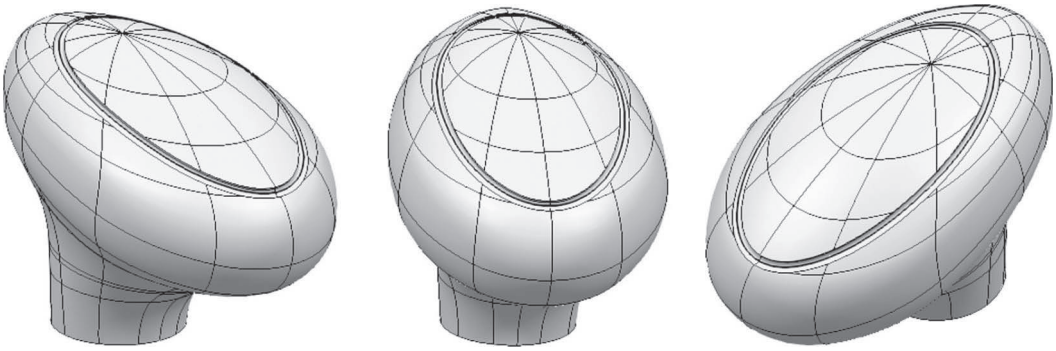

**FIGURE 3.483** Displaying the result of the *Trim* operation, the final model of the gearbox shifter knob.

## 3.21 MODELLING OF A COMPLEX PLASTIC COVER

In this tutorial, a complex plastic part will be modelled combining *Part Design* and *GSD* workbenches and their tools.

Figure 3.484 shows the 2D drawing of the cover with a sufficient number of views, projections and section views. By observing its shape, it could be concluded that the main feature is a revolution surface with a couple of pockets. Especially interesting are side and back pockets. Also, in the section *A-A*, the constant value of thickness of 1.5 mm tells the user that this is a shell-like structure and that the *GSD* workbench could be a good starting choice to model this part, or *Shell* tool in *Part Design* may be a good replacement. After learning from this tutorial, the user may try another – his own approach.

In the *YZ Plane*, in the *Sketch.1*, the user begins to draw a profile consisting of two standard lines. By sketching, the user coincidently connects the first point of the first line with the *H* axis and finishes it by left-clicking somewhere inside of the upper right quadrant. The second line should be horizontal, and its second point is coincident with the *V* axis. This profile is open, but closed by axes, and for full constraining, some dimensions are needed, as shown in Figure 3.485.

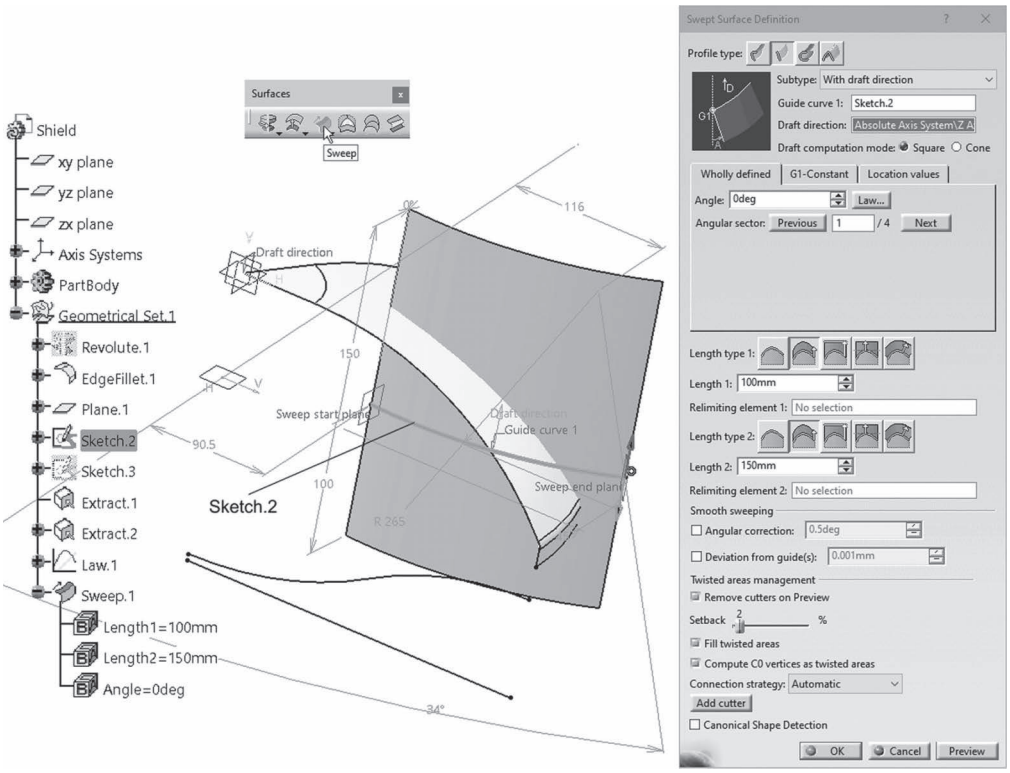


**FIGURE 3.545** Creating a *Sweep.1* surface feature based on *Law.1*.

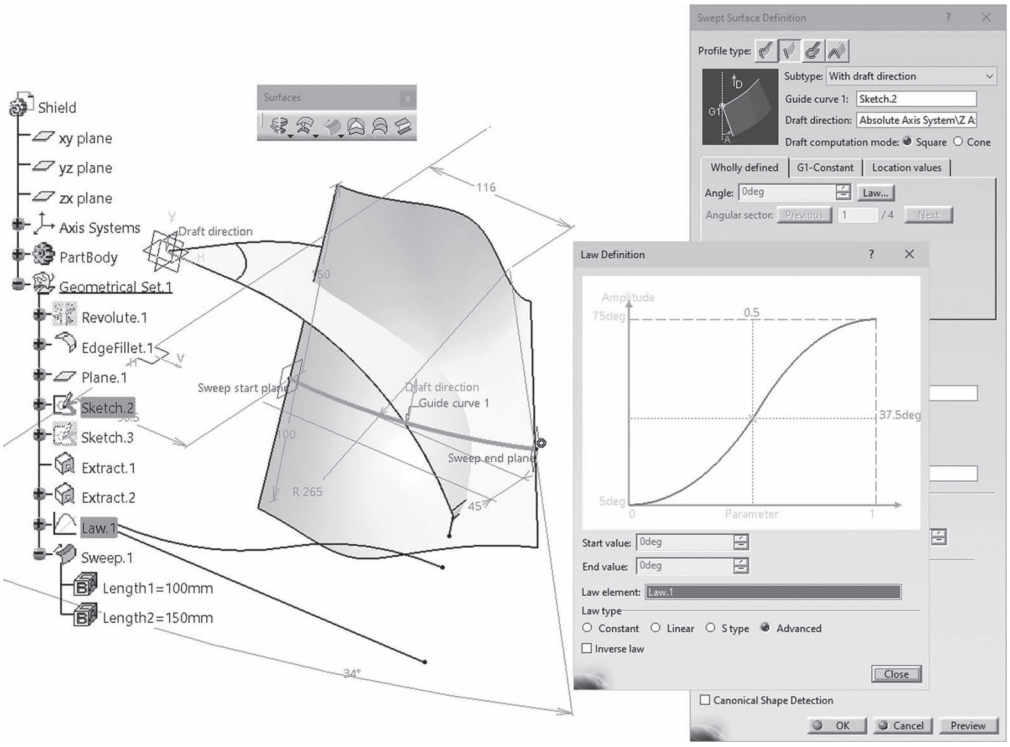


**FIGURE 3.546** Creating a *Sweep.1* surface feature based on *Law.1* – after applying the law.

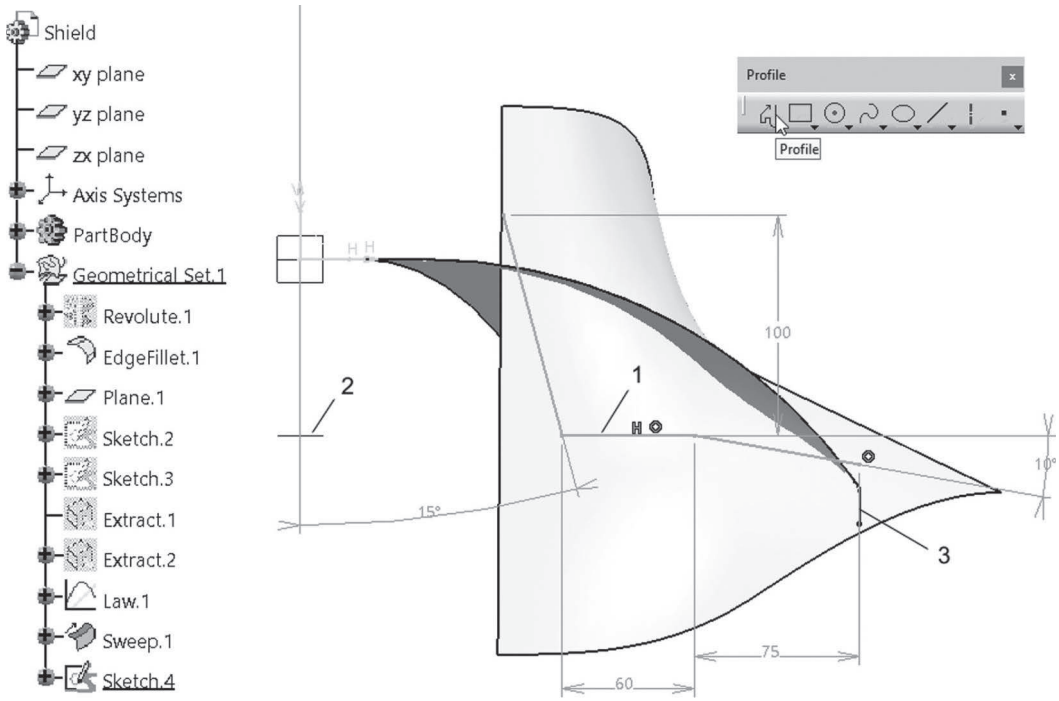


**FIGURE 3.547** Drawing a *Sketch.4* with an open profile in *YZ Plane*.

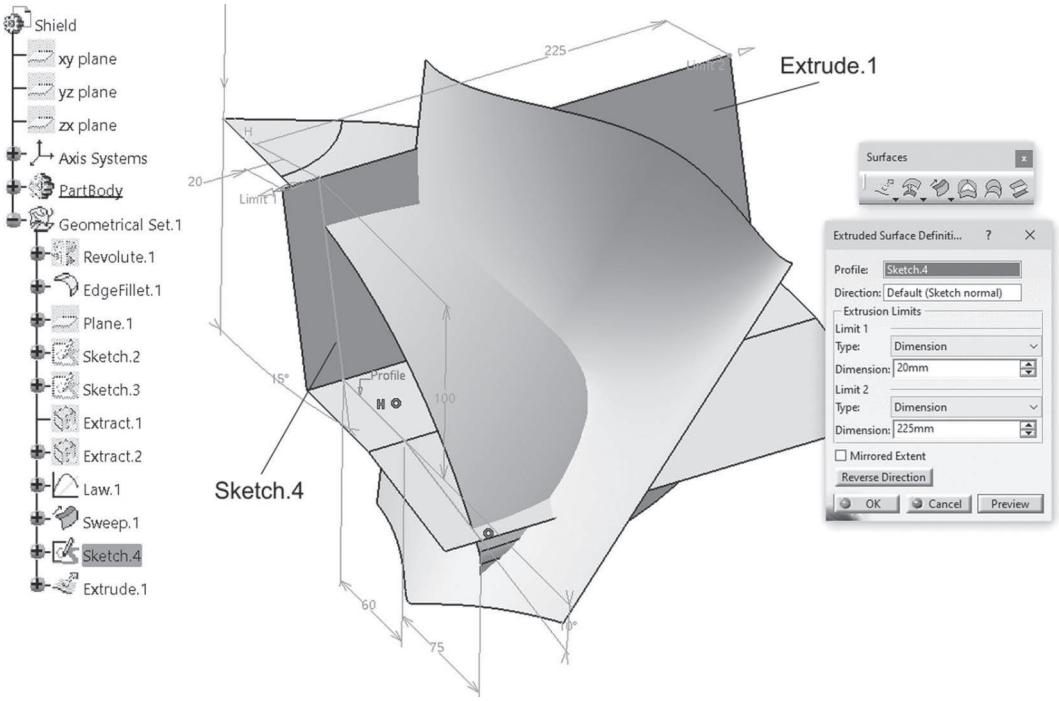


**FIGURE 3.548** Extruding the *Sketch.4* in two directions – *Extrude.1*.

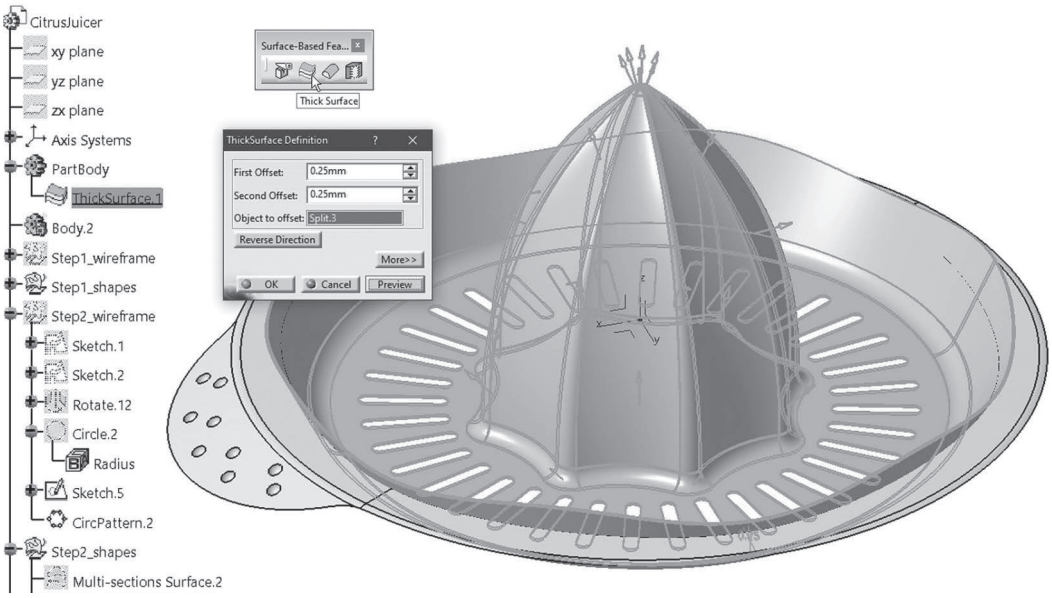


**FIGURE 3.608** Converting a surface into a volumetric solid.

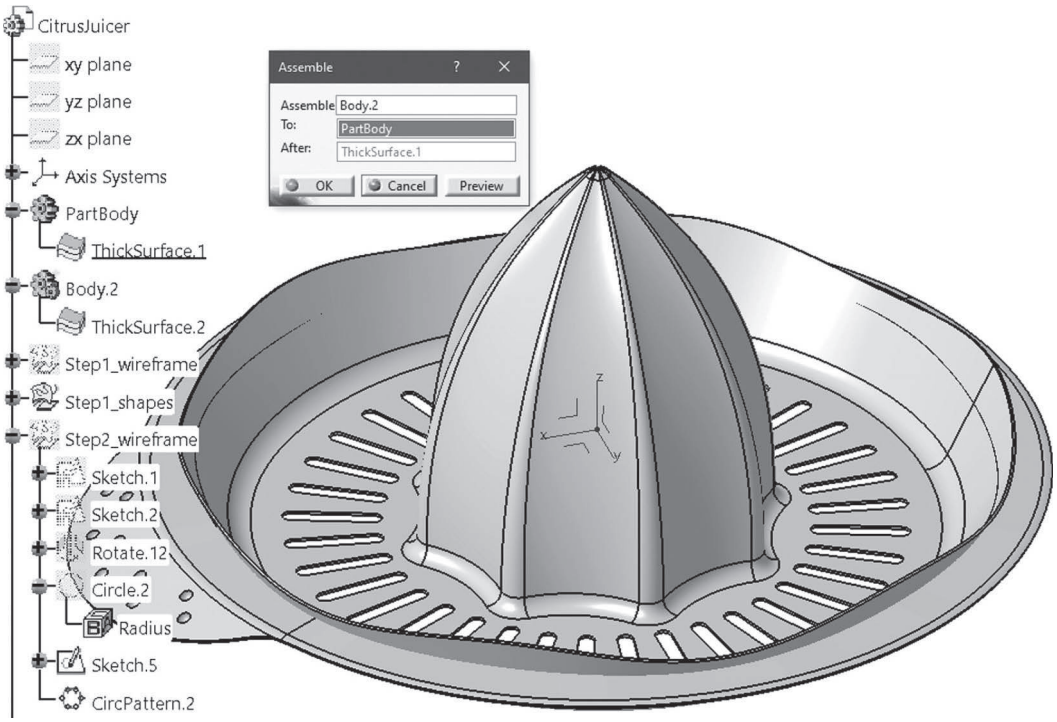


**FIGURE 3.609** Assembling the part bodies into a single solid.

This operation was the last one in the modelling process of the citrus juicer. The result is presented in Figure 3.610.

In the modelling phases of the juicer, the user had to create several geometric sets. In this manner, he kept the 3D model organized in wireframe and shape features, easy to be edited later.


**FIGURE 3.610** The result of the modelling process.

## 3.25 MODELLING OF AN ORNAMENT PANEL

This tutorial explains how to create an ornament panel part. Depending on the dimensions of this part, it can be mounted on the facades of buildings with a shading or decorative purpose. For the realization of the parameterized model of the panel, the user will apply formulas, geometric sets, different operations for copying some features from the specification tree, etc.

Figure 3.611 contains four projections, of which two are orthogonal (one view and one section) and two isometric views show the special shape of this part. The dimensions of the elements for

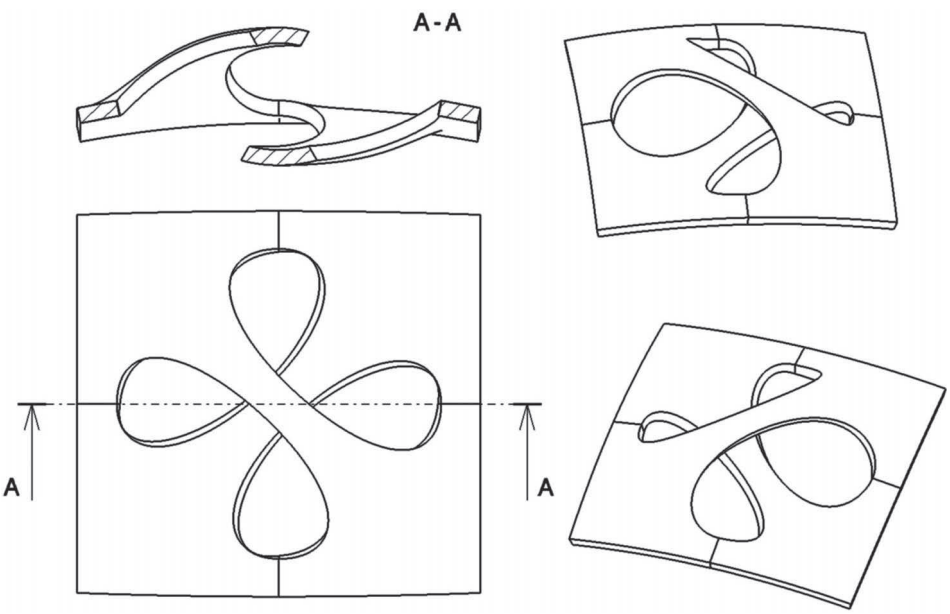


**FIGURE 3.611** Representations of the ornament part to be modelled.

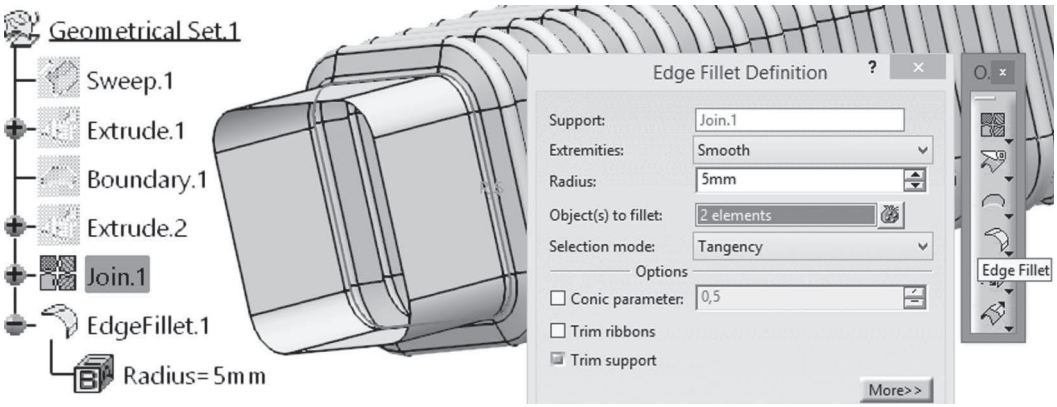


**FIGURE 3.666** Adding fillets on edges.

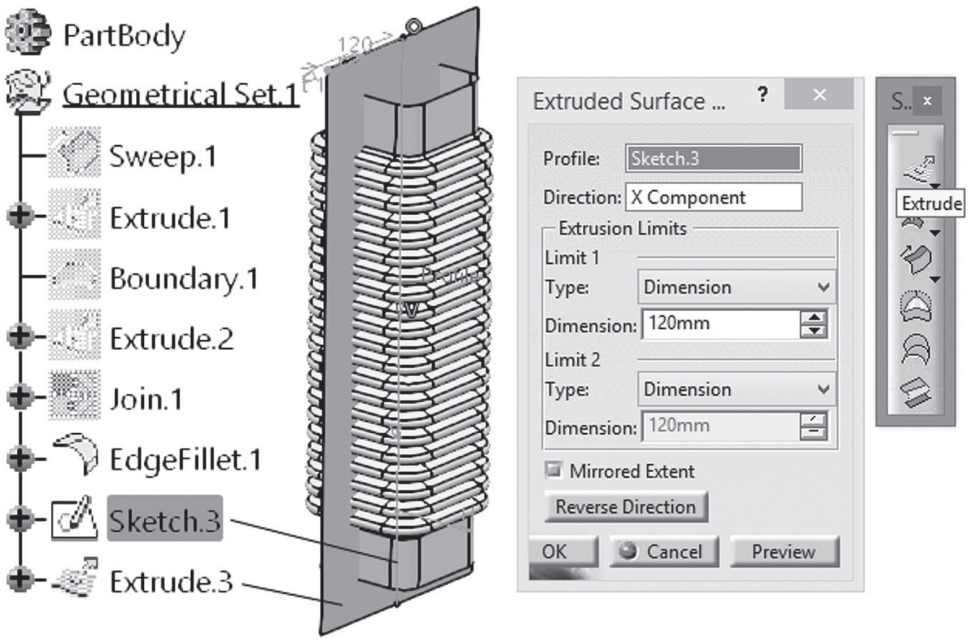


**FIGURE 3.667** Creating a planar surface inside the first bellows.

In the same *YZ Plane*, in the *Sketch.4*, a spline curve is drawn, next to the surface *EdgeFillet.1* which represents the bellows. The curve should be similar in size to the *Sketch.3* line and relatively smooth, with no sudden changes in direction and small radii. Outside the *Sketch.4*, this spline curve is extruded and the *Extrude.4* surface is obtained in Figure 3.668. The extrusion is similar to that in which the *Extrude.3* surface was created (Figure 3.667), with the same values of 120 mm.

The user accesses the *Wrap Surface* icon on the *Advanced Surfaces* toolbar and opens the *Wrap Surface Deformation Definition* selection box shown in Figure 3.669. The three fields are filled, by selection, with existing surfaces in the specification tree, as follows: in the *Element to deform* field, the *EdgeFillet.1* surface of the first bellows variant is chosen, *Extrude.3* is selected as the reference surface, and *Extrude.4* is specified as the surface whose shape is to be taken.

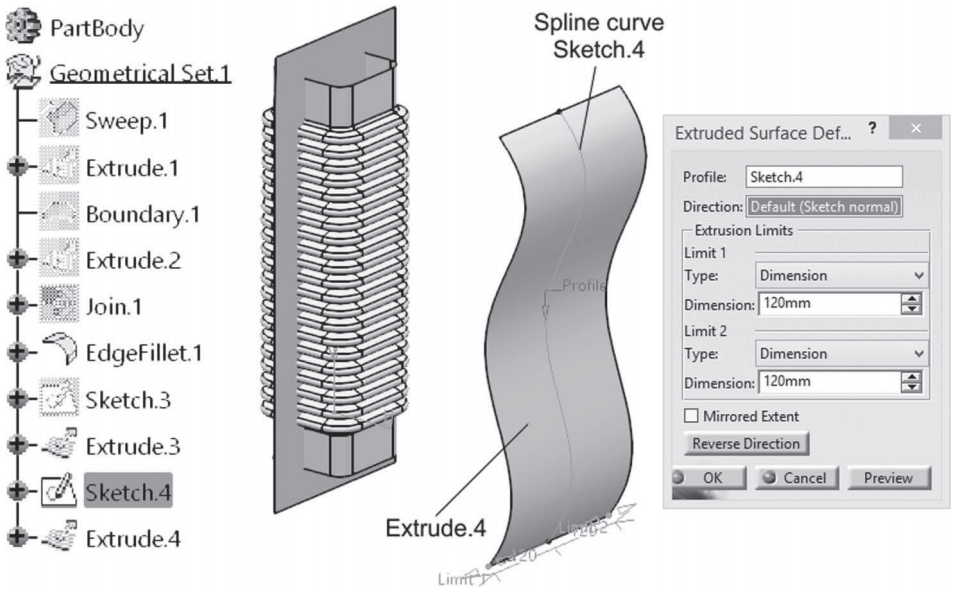


**FIGURE 3.668** Extrusion of the spline curve from *Sketch.4*.

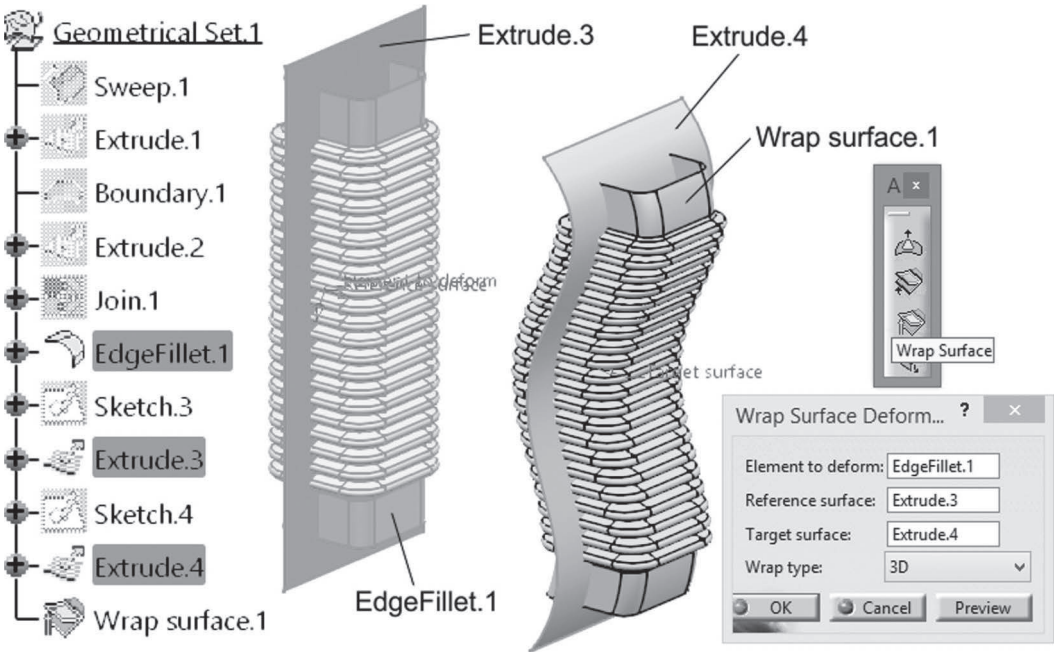


**FIGURE 3.669** Applying the *Wrap Surface* tool to obtain the second bellows variant.

A first solution, corresponding to the *3D* option in the *Wrap type* list, is displayed by pressing the *Preview* button. Both *EdgeFillet.1* and *Wrap surface.1* are visible, but by pressing the *OK* button and confirming the options presented, the *EdgeFillet.1* (first bellows) surface is hidden, but *Extrude.3* remains visible.

The user can choose one of the variants identified by the program, view the obtained parameters and apply their values to the part by pressing the *Apply values to parameters* button (Figure 4.54).

The application continues with the creation of a rule to edit the part if a certain condition is met. The user accesses the *Knowledge Advisor* workbench over the *Start* → *Knowledgeware* menu (Figure 4.48).

The user clicks on the *Rule* icon from the *Reactive Features* toolbar and opens a first *Rule Editor* information box (Figure 4.60), which states the name of the rule, who created it and on what date, and also its positioning in the specification tree.

In the *Rule Editor: Rule.1 Active* editing box (Figure 4.61), some lines of *Visual Basic* code are entered by the user.

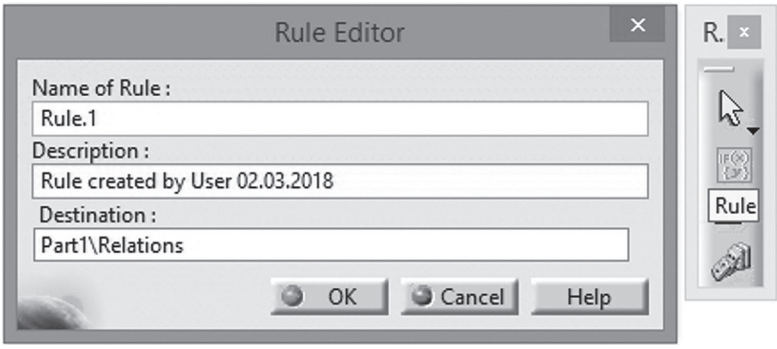


**FIGURE 4.60** Creation of a rule to edit the part if a certain condition is met.

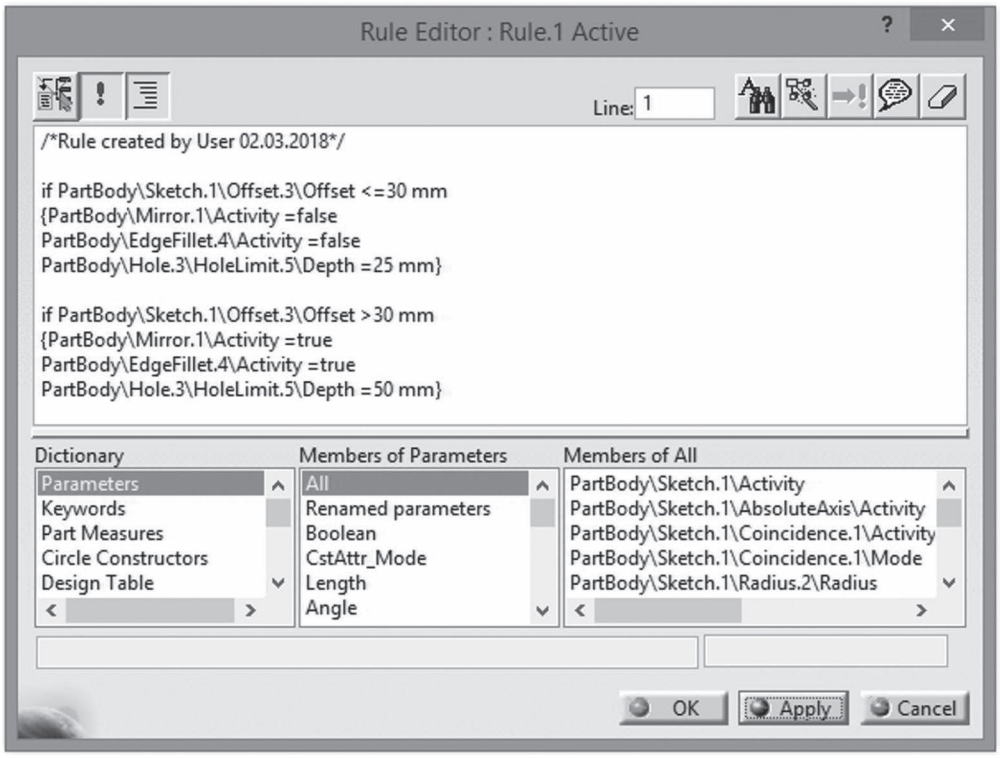


**FIGURE 4.61** Entering the code sequence in *Visual Basic*.

The code sequence compares a parameter with a certain value and, if the condition is fulfilled, one of the two computation variants of the other parameters is executed. The syntax *if… {….}* is used to control the distance (initially, it was 30 mm) between the two circles of the *Sketch.1* and the vertical axis *V* (Figure 4.31), which is compared to be less than or equal to (<=) 30 mm. If this condition is fulfilled by the respective parameter, then the first variant is executed run.

Otherwise, when the distance is greater (>) than 30 mm, the second variant is run. The two variants are briefly explained below.

| | |
|---|---|
| `if PartBody\Sketch.1\Offset.3\Offset <=30 mm` | the distance is compared with the value of 30 mm |
| `{PartBody\Mirror.1\Activity =false` | the *Mirror.1* feature is disabled |
| `PartBody\EdgeFillet.4\Activity =false` | the *EdgeFillet.4* feature is disabled |
| `PartBody\Hole.3\HoleLimit.5\Depth =25 mm}` | the depth of the *Hole.3* becomes 25 mm |
| `if PartBody\Sketch.1\Offset.3\Offset >30 mm` | the distance is compared with the value of 30 mm |
| `{PartBody\Mirror.1\Activity =true` | the *Mirror.1* feature is enabled |
| `PartBody\EdgeFillet.4\Activity =true` | the *EdgeFillet.4* feature is enabled |
| `PartBody\Hole.3\HoleLimit.5\Depth =50 mm}` | the depth of the *Hole.3* becomes 50 mm |

In the first variant (Figure 4.62), when the value of the distance is 28 mm, the features *Mirror.1* and *EdgeFillet.4* (also marked in Figure 4.43) are deactivated with the help of the *Boolean* parameter *Activity* of each one. For each disabled feature, the program adds a set of parentheses *()* next to its icon in the specification tree.

By deactivation, the geometries of the two elements disappear from the 3D model of the part. Also, the depth of the *Hole.3* decreases to 25 mm (the part is no longer pierced). As an example, in this variant, the plastic cover can be used for a smaller and simpler connector with a single input (the remaining features *Pad.3* and *Hole.3* in the specification tree).

If the distance between the circles' centres of the *Sketch.1* is greater than 30 mm (31 mm in the example in Figure 4.63), the features *Mirror.1* and *EdgeFillet.4* become active and the depth of the hole *Hole.3* receives the value of 25 mm (is pierced). In this variant, the part can be mounted as a protection cover for a connector with two inputs.

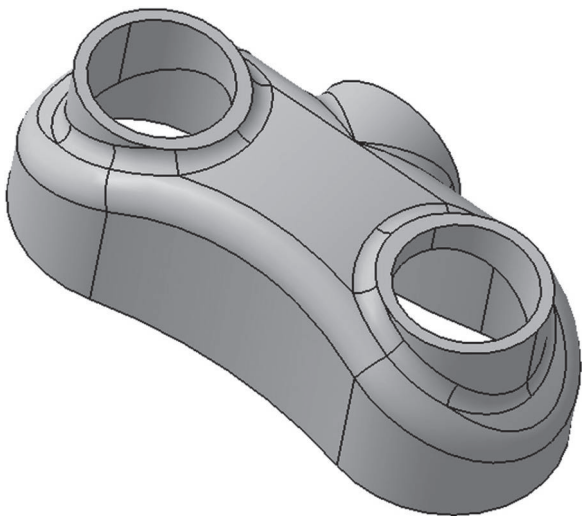

**FIGURE 4.62** The cover part represented in the first simpler variant with a single input.

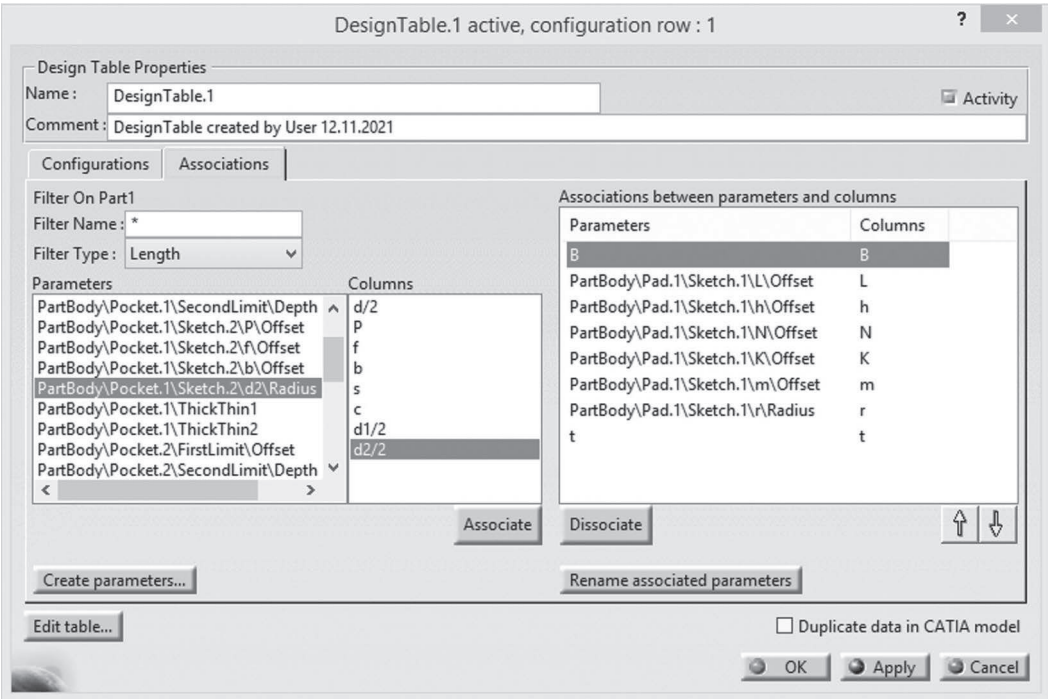


**FIGURE 4.74** Associations between the table columns and the part parameters.

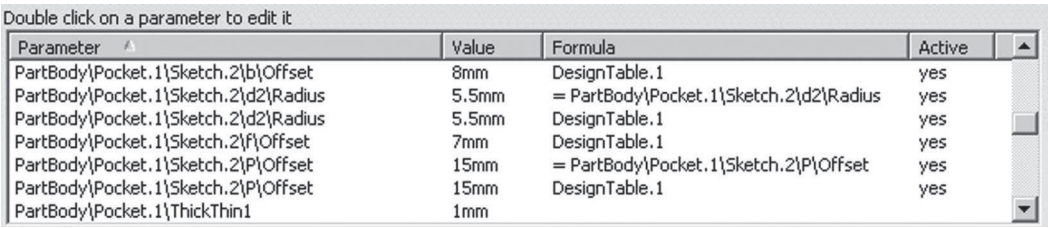


**FIGURE 4.75** Parameters set by formulas and design table.

For these special cases, when parameters are associated with columns, a first parameter-column pair will be created, followed by a formula that equals the second parameter with the one involved in the association.

Figure 4.75 illustrates a portion of the *Formulas* dialog box, which shows the parameters *b*, *d2*, *f* and *P*, as well as the manner how they are defined. Thus, the parameters are associated with columns in a design table (*DesignTable.1*), but another parameter *d2* is defined by a formula equal to parameter *d2* in the table. Similarly, one *P* parameter is equal to another *P* parameter in the design table. The user should note that the values, set in mm, are equal.

The design table, also called family table, and formulas are present in the specification tree (*Relations*).

Figure 4.76 also shows the current configuration (1) of the design table. If the user wants the current part to be modified according to the dimensions set in the *Microsoft Excel* table (Figure 4.72), he will double-click on the *Configuration* feature to open the *Edit Parameter* dialog box (Figure 4.77).